MICHIGAN STATE UNIVERSITY
Department of Mechanical Engineering
ME451 Control Systems Fall 2008

Solution.

Midterm Exam I

Closed Book. One 8.5 × 11 page of handwritten note allowed.

Your Name:
Student Number:

The extra bonus points of this exam is 10.
Please start with an easy question and try to answer all questions.

Problem:	1	2	3	Total
Max. Grade:	40	30	40	110
Grade:				

1 Problem

a. (20 points) State two definitions for "transfer function".

b. (20 points) Figure 1 shows a block diagram of two interconnected transfer functions $G(s)$ and $K(s)$. Find the transfer function from $u(t)$ to $y(t)$.

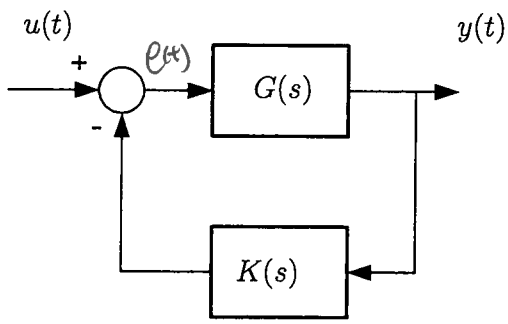

Figure 1: A block diagam.

a.

(1). A transfer function is defined by

$$G(s) := \frac{Y(s)}{U(s)}$$

where $Y(s)$ is the Laplace transform of system output and $U(s)$ is the Laplace transform of system input.

(2) A transfer function can also be defined as the Laplace transform of impulse response.

b.

Method ①:

$$\begin{cases} Y(s) = G(s)E(s). \\ E(s) = U(s) - K(s)Y(s). \end{cases}$$

$$\Rightarrow \quad Y(s) = G(s)U(s) - G(s)K(s)Y(s).$$

$$\Rightarrow \quad \frac{Y(s)}{U(s)} = \frac{G(s)}{1 + G(s)K(s)}$$

Method ②:

$$\frac{Y(s)}{U(s)} = \frac{F_g}{1 - L_g} = \frac{G(s)}{1-(-G(s)K(s))} = \frac{G(s)}{1+G(s)K(s)}$$

2 Problem

(30 points) Figure 2 shows an electrical system with an OP amp. Obtain the transfer function $G(s)$ from the input $V_i(s)$ to the output $V_o(s)$, i.e.,

$$G(s) := \frac{V_o(s)}{V_i(s)} = \frac{\mathcal{L}(v_o(t))}{\mathcal{L}(v_i(t))},$$

where $\mathcal{L}(v(t))$ denotes the Laplace transform of $u(t)$. Hints: You can use the formula derived in the class for this type of circuits. Alternatively you can rederive the formula again using two rules for OP amps i.e., $i^- = 0$ and $v_d = 0$.

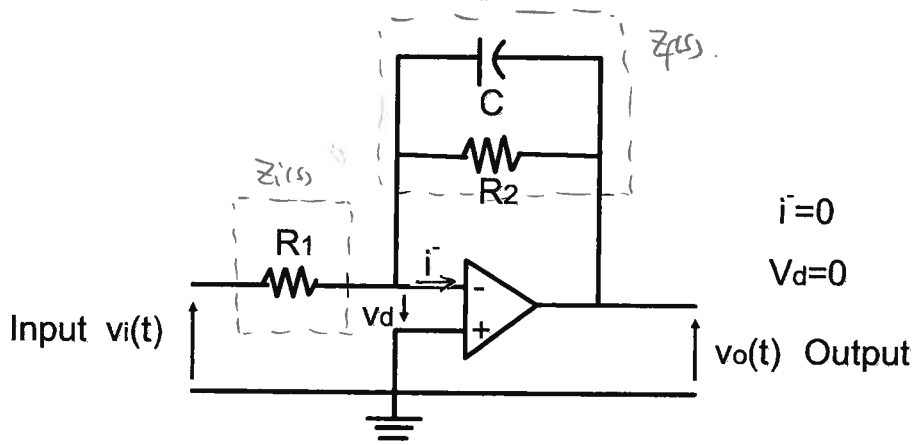

Figure 2: An electrical system with an OP amp.

$$\begin{cases} Z_f(s) = \dfrac{\frac{R_2}{Cs}}{\frac{1}{Cs} + R_2} = \dfrac{R_2}{R_2 C s + 1} \\ Z_i(s) = R_1 \end{cases}$$

According to the formula derived in the class notes (page 16 in Lecture 4)

$$G(s) = \frac{V_o(s)}{V_i(s)} = -\frac{Z_f(s)}{Z_i(s)} = \frac{-R_2/R_1}{R_2 C s + 1}$$

3 Problem

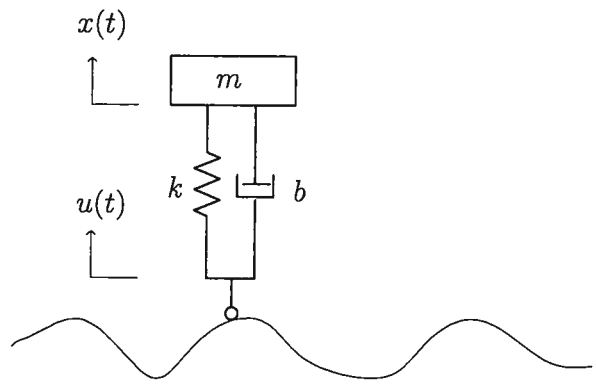

Figure 3: A simplified quarter car model.

Figure 3 shows a simplified quarter car model. Assume no gravity. Notations are as follows.

- $u(t)$: the end position of the system with the coordinate shown in Figure 3.
- $x(t)$: the position of the mass with the coordinate shown in Figure 3.
- m : the mass of the car.
- k : the spring constant of a linear spring.
- b : the damping coefficient of a linear damper.

a. (20 points) Draw the complete free body diagram of the quarter car system.

b. (10 points) Determine the equation of motion.

c. (10 points) Determine the transfer function from the input $u(t)$ to the output $x(t)$, i.e.,

$$G(s) := \frac{X(s)}{U(s)} = \frac{\mathcal{L}(x(t))}{\mathcal{L}(u(t))}.$$

a.

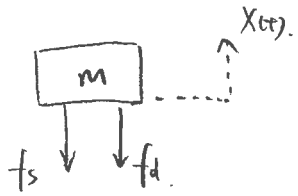

$$f_s = k(X(t) - u(t))$$

$$f_d = b(\dot{X}(t) - \dot{u}(t))$$

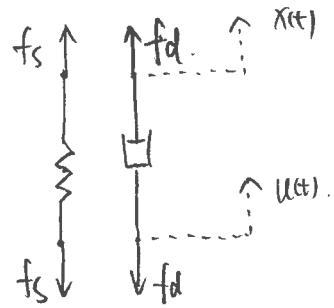

b. $m\ddot{X}(t) = -k(X(t) - U(t)) - b(\dot{X}(t) - \dot{U}(t))$

c. $ms^2 X(s) = -k(X(s) - U(s)) - bs(X(s) - U(s))$

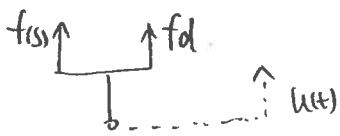

$$\Rightarrow G(s) = \frac{X(s)}{U(s)} = \frac{bs + k}{ms^2 + bs + k}$$