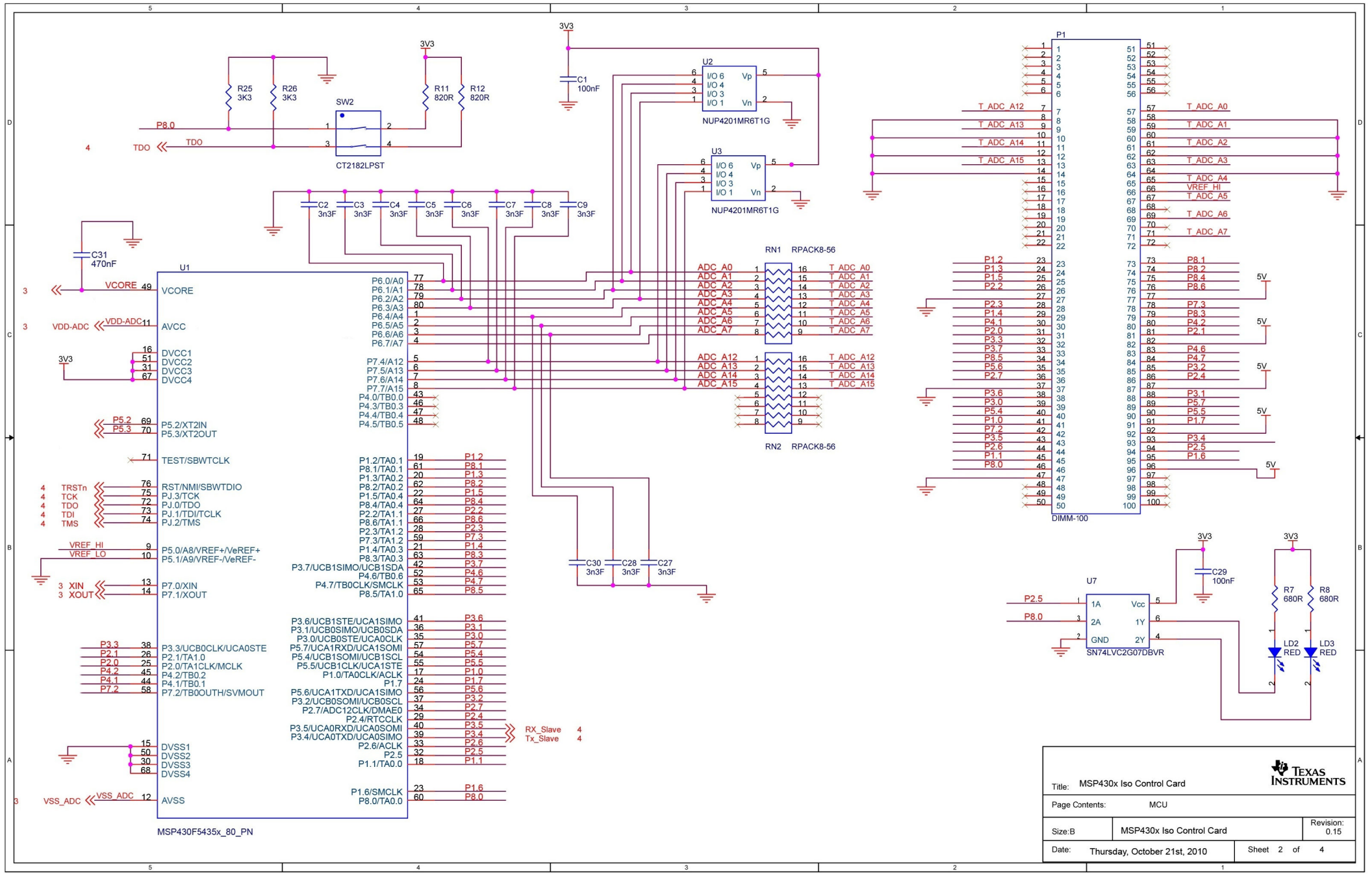
U1
MSP430F5435x_80_PN
VCORE
VDD-ADC
AVCC
DVCC1
DVCC2
DVCC3
DVCC4
P5.2/XT2IN
P5.3/XT2OUT
TEST/SBWTCLK
RST/NMI/SBWTDIO
PJ.3/TCK
PJ.0/TDO
PJ.1/TDI/TCLK
PJ.2/TMS
P5.0/A8/VREF+/VeREF+
P5.1/A9/VREF-/VeREF-
P7.0/XIN
P7.1/XOUT
P3.3/UCB0CLK/UCA0STE
P2.1/TA1.0
P2.0/TA1CLK/MCLK
P4.2/TB0.2
P4.1/TB0.1
P7.2/TB0OUTH/SVMOUT
DVSS1
DVSS2
DVSS3
DVSS4
AVSS
VSS_ADC
P6.0/A0
P6.1/A1
P6.2/A2
P6.3/A3
P6.4/A4
P6.5/A5
P6.6/A6
P6.7/A7
P7.4/A12
P7.5/A13
P7.6/A14
P7.7/A15
P4.0/TB0.0
P4.3/TB0.3
P4.4/TB0.4
P4.5/TB0.5
P1.2/TA0.1
P8.1/TA0.1
P1.3/TA0.2
P8.2/TA0.2
P1.5/TA0.4
P8.4/TA0.4
P2.2/TA1.1
P8.6/TA1.1
P2.3/TA1.2
P7.3/TA1.2
P1.4/TA0.3
P8.3/TA0.3
P3.7/UCB1SIMO/UCB1SDA
P4.6/TB0.6
P4.7/TB0CLK/SMCLK
P8.5/TA1.0
P3.6/UCB1STE/UCA1SIMO
P3.1/UCB0SIMO/UCB0SDA
P3.0/UCB0STE/UCA0CLK
P5.7/UCA1RXD/UCA1SOMI
P5.4/UCB1SOMI/UCB1SCL
P5.5/UCB1CLK/UCA1STE
P1.0/TA0CLK/ACLK
P1.7
P5.6/UCA1TXD/UCA1SIMO
P3.2/UCB0SOMI/UCB0SCL
P2.7/ADC12CLK/DMAE0
P2.4/RTCCLK
P3.5/UCA0RXD/UCA0SOMI
P3.4/UCA0TXD/UCA0SIMO
P2.6/ACLK
P2.5
P1.1/TA0.0
P1.6/SMCLK
P8.0/TA0.0
RX_Slave
Tx_Slave
TDO
P8.0
SW2
CT2182LPST
R25 3K3
R26 3K3
R11 820R
R12 820R
3V3
C1 100nF
C31 470nF
C2 3n3F
C3 3n3F
C4 3n3F
C5 3n3F
C6 3n3F
C7 3n3F
C8 3n3F
C9 3n3F
C30 3n3F
C28 3n3F
C27 3n3F
U2
U3
NUP4201MR6T1G
I/O 6
I/O 4
I/O 3
I/O 1
Vp
Vn
RN1 RPACK8-56
RN2 RPACK8-56
ADC_A0
ADC_A1
ADC_A2
ADC_A3
ADC_A4
ADC_A5
ADC_A6
ADC_A7
ADC_A12
ADC_A13
ADC_A14
ADC_A15
T_ADC_A0
T_ADC_A1
T_ADC_A2
T_ADC_A3
T_ADC_A4
T_ADC_A5
T_ADC_A6
T_ADC_A7
T_ADC_A12
T_ADC_A13
T_ADC_A14
T_ADC_A15
P1
DIMM-100
VREF_HI
5V
U7
SN74LVC2G07DBVR
1A
2A
GND
Vcc
1Y
2Y
C29 100nF
R7 680R
R8 680R
LD2 RED
LD3 RED
TRSTn
TCK
TDI
TMS
XIN
XOUT
VREF_LO
P2.5
P8.0
Title: MSP430x Iso Control Card
Page Contents: MCU
Size:B
MSP430x Iso Control Card
Revision: 0.15
Date: Thursday, October 21st, 2010
Sheet 2 of 4
TEXAS INSTRUMENTS

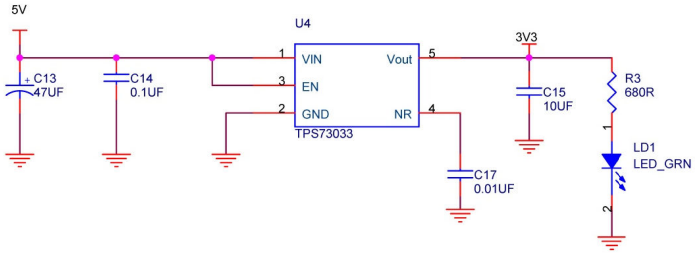

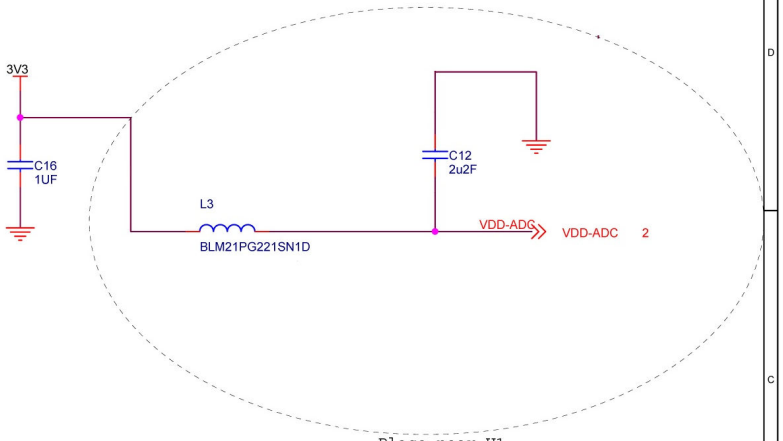

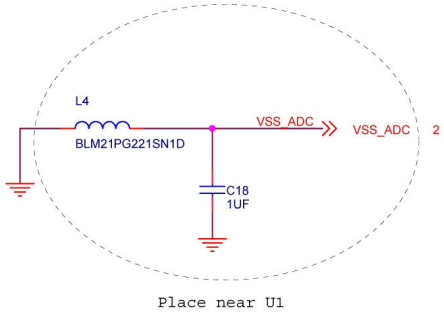

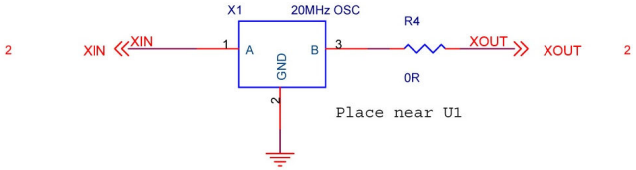

Title: MSP430x Iso Control Card		Texas Instruments
Page Contents: Power/Ground		
Size:B	MSP430x Iso Control Card	Revision: 0.15
Date: Thursday, October 21st, 2010	Sheet 3 of 4	

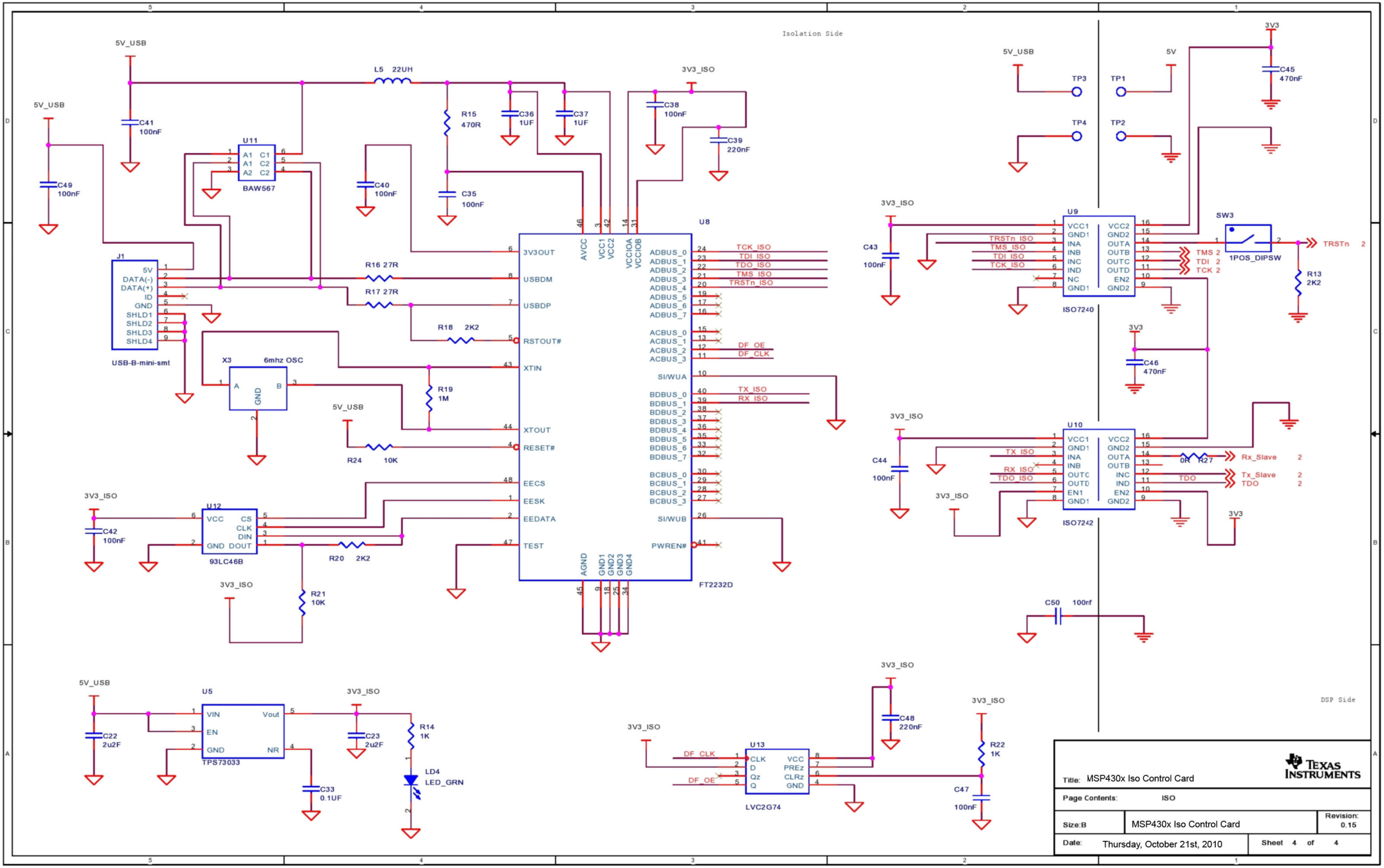
Isolation Side
DSP Side
5V_USB
3V3_ISO
3V3
5V
L5 22UH
C41 100nF
C49 100nF
R15 470R
C36 1UF
C37 1UF
C38 100nF
C39 220nF
C40 100nF
C35 100nF
U11
BAW567
J1
USB-B-mini-smt
R16 27R
R17 27R
R18 2K2
X3
6mhz OSC
R19 1M
R24 10K
U8
FT2232D
3V3OUT
USBDM
USBDP
RSTOUT#
XTIN
XTOUT
RESET#
EECS
EESK
EEDATA
TEST
AVCC
VCC1
VCC2
VCCIOA
VCCIOB
AGND
GND1
GND2
GND3
GND4
ADBUS_0
ADBUS_1
ADBUS_2
ADBUS_3
ADBUS_4
ADBUS_5
ADBUS_6
ADBUS_7
ACBUS_0
ACBUS_1
ACBUS_2
ACBUS_3
SI/WUA
BDBUS_0
BDBUS_1
BDBUS_2
BDBUS_3
BDBUS_4
BDBUS_5
BDBUS_6
BDBUS_7
BCBUS_0
BCBUS_1
BCBUS_2
BCBUS_3
SI/WUB
PWREN#
TCK_ISO
TDI_ISO
TDO_ISO
TMS_ISO
TRSTn_ISO
DF_OE
DF_CLK
TX_ISO
RX_ISO
U12
93LC46B
VCC
CS
CLK
DIN
GND
DOUT
C42 100nF
R20 2K2
R21 10K
U5
TPS73033
VIN
EN
GND
Vout
NR
C22 2u2F
C23 2u2F
C33 0.1UF
R14 1K
LD4
LED_GRN
U13
LVC2G74
CLK
D
Qz
Q
VCC
PREz
CLRz
GND
C48 220nF
R22 1K
C47 100nF
TP3
TP4
TP1
TP2
C45 470nF
U9
ISO7240
VCC1
GND1
INA
INB
INC
IND
NC
GND1
VCC2
GND2
OUTA
OUTB
OUTC
OUTD
EN2
GND2
C43 100nF
SW3
1POS_DIPSW
TRSTn 2
TMS 2
TDI 2
TCK 2
R13 2K2
C46 470nF
U10
ISO7242
VCC1
GND1
INA
INB
OUTC
OUTD
EN1
GND1
VCC2
GND2
OUTA
OUTB
INC
IND
EN2
GND2
C44 100nF
0R R27
Rx_Slave 2
Tx_Slave 2
TDO 2
C50 100nf
Title: MSP430x Iso Control Card
Page Contents: ISO
Size:B
MSP430x Iso Control Card
Revision: 0.15
Date: Thursday, October 21st, 2010
Sheet 4 of 4
TEXAS INSTRUMENTS