Intelligent Methods for Smart Microgrids

Joydeep Mitra, Niannian Cai, Mo-Yuen Chow, Sukumar Kamalasadan, Wenxin Liu, Wei Qiao, Sri Niwas Singh, Anurag K. Srivastava, Sanjeev K. Srivastava, Ganesh K. Venayagamoorthy, and Ziang Zhang

***Abstract*—This paper summarizes ongoing research in the application of intelligent methods to the design, modeling, simulation and control of microgrids including optimal design of microgrids, and centralized and decentralized control.**

***Index Terms*— intelligent algorithms, intelligent control and modeling, microgrid, smart microgrid**

I. Introduction

THIS paper summarizes ongoing research in the area of intelligent methods applied to the design and control of microgrids. In the context of the work reported here, the term *microgrid* refers to power systems of limited geographic extent, containing embedded generation or storage resources or both, that may operate in parallel the grid or in isolation. This definition is broad enough that it applies even to small, standalone systems that may never operate in grid connected mode, such as ship-board systems; the methods described here apply to all such microgrids.

At this time there is significant activity in this field, worldwide. In the following sections, we present a sampling of research that is currently being conducted on this subject at selected research institutions.

II. A Decentralized Multi-Agent System for Microgrid Operation (Michigan State University)

Normally, a microgrid can be operated in two modes, grid-connected and islanded. In grid-connected mode, micro-sources are expected to generate power at their rated capacity to decrease power imported from the grid, and loads can consume at their respective demand levels, since the grid power is assumed to be infinite and sufficient to support loads. In islanded mode, the unavailability of grid requires specific management of micro-sources and loads, since they cannot simply generate or consume power at their willing. Disconnection with the grid demands that total power generated by micro-sources should equal to the total power consumed by the loads plus line losses within microgrid.

A well-known method of maintaining power balance within a microgrid is the active power/frequency-droop control [1]–[2]. However, this method is usually applicable for solving small and fast-changing mismatches and requires large energy storage devices as well as demand side control. In our work, we have developed a decentralized architecture of multi-agent system performing microgrid control and load balancing functions. In this architecture, all agents are hierarchically equal and there is no central agent. Any agent can be removed or added without reconstructing the system. Therefore, reliability, vulnerability and flexibility of the system are improved, compared with centralized architecture.

A three step communication algorithm is proposed for this decentralized multi-agent system to acquire power mismatches, dispatch power generation and manage loads in microgrid. The algorithm is summarized as follows: Step 1: Active agent processes information and data it obtained from last agent or itself locally. Step 2: Active agent transmits information and data to its neighbor who is marked as “unprocessed”. Step 3: If the active agent has no neighbors or all its neighbors are marked as “processed”, then it return its information and data to its last agent. A detailed description of three step communication algorithm for multi-agent system can be found in [3].

Generally, micro-sources in a microgrid cannot be connected to the grid directly, since their outputs are dc or non-utility grade ac. They need to interface with the microgrid by power electronic interfaces. In islanded mode, when multi-agent system completes the communication cycle and determines the real and reactive power generation for each micro-source, it will send these values to the corresponding power electronic control module, which controls power electronic devices to output the required real and reactive power. The control block diagram for power electronic interface under multi-agent operation is shown in Fig. 1.

Controls are implemented in dq reference frame. Block A extracts voltage amplitude V and angle θ_v at the sending point of power electronic interfaces. P^*, Q^* are given by local agent.

The authors (listed alphabetically) are members of the Task Force on Intelligent Control Systems for Microgrids, which is part of the Intelligent Control Systems (ICS) Working Group of the Intelligent Systems Subcommittee, under the Power Systems Analysis, Computing and Economics Committee of the IEEE Power & Energy Society.

J. Mitra (ICS for Microgrid Task Force Chair) and N. Cai are with Michigan State University, East Lansing, MI 48824, USA (e-mail: mitraj@msu.edu). M. Chow and Z. Zhang are with North Carolina State University, Raleigh, NC 27695, USA (e-mail: chow@ncsu.edu). S. Kamalasadan is with University of North Carolina at Charlotte, Charlotte, NC 28223, USA (e-mail: skamalas@uncc.edu). W. Liu is with New Mexico State University, Las Cruces, NM 88003, USA (e-mail: wliu@nmsu.edu). W. Qiao is with University of Nebraska, Lincoln, NE 68588, USA (e-mail: wqiao@engr.unl.edu). S. N. Singh is with Indian Institute of Technology, Kanpur, UP 208016, INDIA (e-mail: snsingh@iitk.ac.in). A. K. Srivastava is with Washington State University, Pullman, WA 99164, USA (e-mail: asrivast@eecs.wsu.edu). S. K. Srivastava is with the Center for Advance Power Systems at Florida State University, Tallahassee, FL 32304, USA (e-mail: sanjeev@caps.fsu.edu). G. K. Venayagamoorthy is ICS Working Group Chair and is with Missouri University of Science & Technology, Rolla, MO 65409, USA (e-mail: gkumar@ieee.org).

Block B calculates instantaneous value of $i_p^*(t)$, $i_q^*(t)$ based on the values of V, θ_v, P^*, Q^* by equations (1) and (2):

$$i_p^*(t) = \mathrm{Re}\left(\frac{P^* + jQ^*}{V\cos\theta_v + jV\sin\theta_v}\right) \quad (1)$$

$$i_q^*(t) = -\mathrm{Im}\left(\frac{P^* + jQ^*}{V\cos\theta_v + jV\sin\theta_v}\right) \quad (2)$$

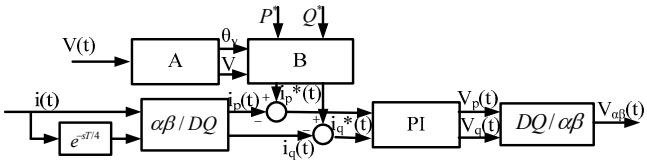

Fig. 1. Control block for power electronic interface

Simulations are conducted in MATLAB/SIMULINK and a microgrid with four distributed generators and five centralized loads is constructed and operated under proposed decentralized architecture of multi-agent system. Results indicate that this kind of architecture can operate microgrid effectively [3].

III. Embedded Distributed Controllers (North Carolina State University)

In the next generation smart grid, effective distributed control algorithms could be embedded in distributed controllers to properly allocate electrical power among connected buses autonomously. In FREEDM system at NCSU, we have developed a novel distributed control algorithm to solve the economic dispatch problem in a distributed manner [4]. We have developed measures to indicate different topologies of distribution systems and their configuration properties.

The objective of Economic Dispatch Problem (EDP) is to minimize the total cost of operation. Conventionally economic dispatch is achieved by control center which calculates the optimal system operation point based on the information acquired from entire system. Then control signals will be sending back to each generator. When using Lagrange multiplier method to solve EDP, by assuming there is no generator reached its generation limit, each generator will have the same Incremental Cost (also known as λ) at the optimal operating point. An appropriate consensus algorithm can guarantee the consensus variables on all agents converge to a common value asymptotically [5]. Thus λ has been selected as the consensus variable. This is illustrated in Fig. 2.

Consider the 3-bus system illustrated in Fig. 2. Each bus has its own generator and load. Fig. 2(a) shows the system communication topology when using the conventional central control. The control center acquires all the information (e.g., loads, output power of each generator) and calculates λs for each generator (G1, G2 and G3). By using the consensus algorithm and select λ as the consensus variable, EDP can be solved in a distributed manner. Fig. 2(b) is the distributed control consensus network: the local controller (embedded in each generator) will update its own λ based on its neighbor's λs. In addition, a "leader generator" has to be selected which will control the increase or decrease of the group λ. That is, if the sum of total power generation is larger than the actual load, then decrease the group λ; and vice versa. In the example shown in Fig. 2(b), G1 has been selected as the leader generator. By following the consensus algorithm, the system will converge to a common λ asymptotically. The detailed problem formulation and simulation results can be found in [4].

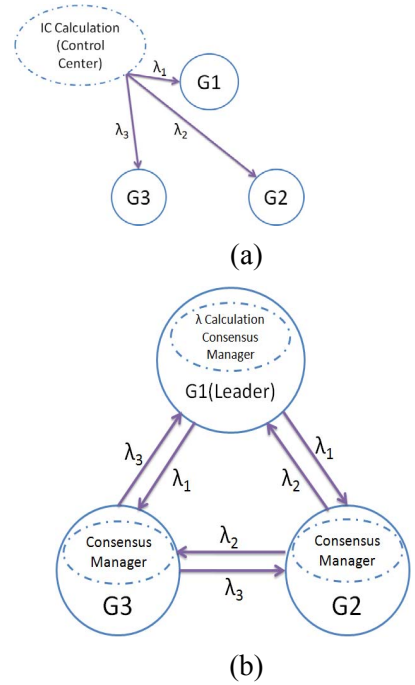

Fig. 2. (a) Conventional Centralize Control Communication Topology for a 3-bus system, (b) Distributed Control Incremental Cost Consensus Network

This Incremental Cost Consensus algorithm guaranteed that all of the generation units can converge to optimal IC asymptotically, as long as there exists a common optimal IC corresponding to the minimum fuel cost point subject to the power balance constraint. The convergence is also guaranteed under different communication topologies as long as a minimal spanning tree exists in the communication topology.

IV. Intelligent System-centric Controller Based Micro Grid Control (University of North Carolina at Charlotte)

Microgrid architecture mainly consists of Distributed Generators (DG) controlled by local controllers. In this work we developed unique nonlinear models, local controllers for the Photo Voltaic (PV) array and Proton Exchange Membrane (PEM) fuel cell based microgrid system and a novel area controller at the point of coupling of microgrid to improve the performance of the local controllers. Nonlinear model of PEM fuel cell include the reformer and fuel cell stack. Solar PV modules and arrays models are controlled locally with a charge controller that provides Maximum Power Point Tracking (MPPT). These models are first tested for step changes in P and Q load and the simulated model output is compared with the real-system parameters. Then these two

renewable energy based microgrid is integrated using a three phase Voltage Source Inverter (VSI) and DC-DC converter models for each system. Finally, this hybrid system is interconnected with the power grid and the performance of the hybrid microgrid with an infinite bus power system as a part of the smart grid is analyzed.

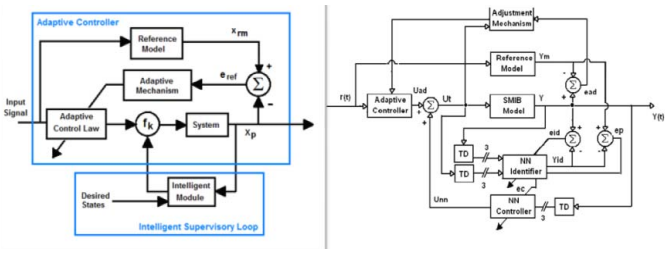

Input signal: Vac, P and Q; Output signal: δ

Fig. 3. ISCC acting as area controller

As a novel area controller, an Intelligent System Centric Controller (ISCC) is designed at the interconnecting bus (Fig.3) based on neuro controller and identifier. For analysis, three cases for interconnection of the microgrid are evaluated; a) Island mode b) Connected to the power grid extra power flowing to the grid and c) Connected to the power grid with power borrowed from the grid. The ability of ISCC for load following with priority to PV system and optimal power tracking of the microgrid was the overall focus. Fig.4 and Fig. 5 illustrates the overall system and one subsystem (PV system) respectively.

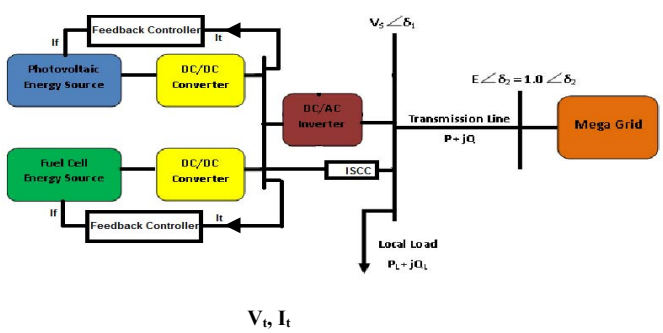

V_t, I_t

Fig. 4. Block diagram of grid connected renewable microgrid

For modeling, unique nonlinear equations are used for both the renewable energy sources and these models are validated with real-life systems. Then each of these energy sources is interfaced to a Voltage Source Inverter (VSI) through a DC/DC converter (Fig. 4). VSI has been modeled with current and voltage controller as shown in Fig. 6. The controllers are designed offline and provide sufficient tracking capability for a designed domain of interest.

In order to meet the online variations, the input to VSI controllers are calculated using the neural network output that models the microgrid and signals the voltage angles (delta). Fig. 7 illustrates the operation of microgrid with local and area controllers. It was observed that the ISCC as an area controller provides continuous load tracking with priority to PV system, thereby increasing the penetration level of renewable energy resource. Also, as the proposed architecture allows continuous load following capability, a constant load is seen at the power grid in spite of load changes at the interconnecting bus.

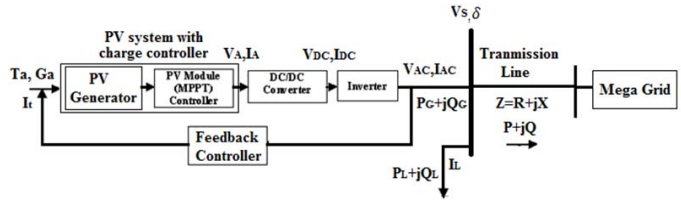

Fig. 5. Block diagram of PV System based micro-source

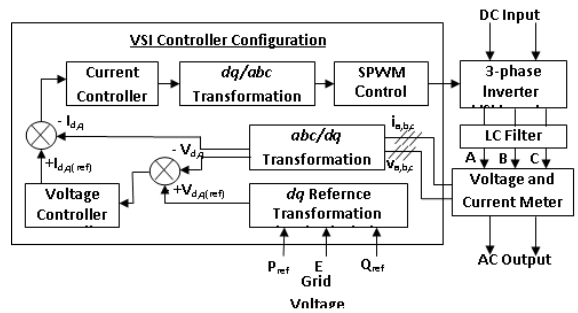

Fig. 6. Overall block diagram of Microgrid System with Interconnection

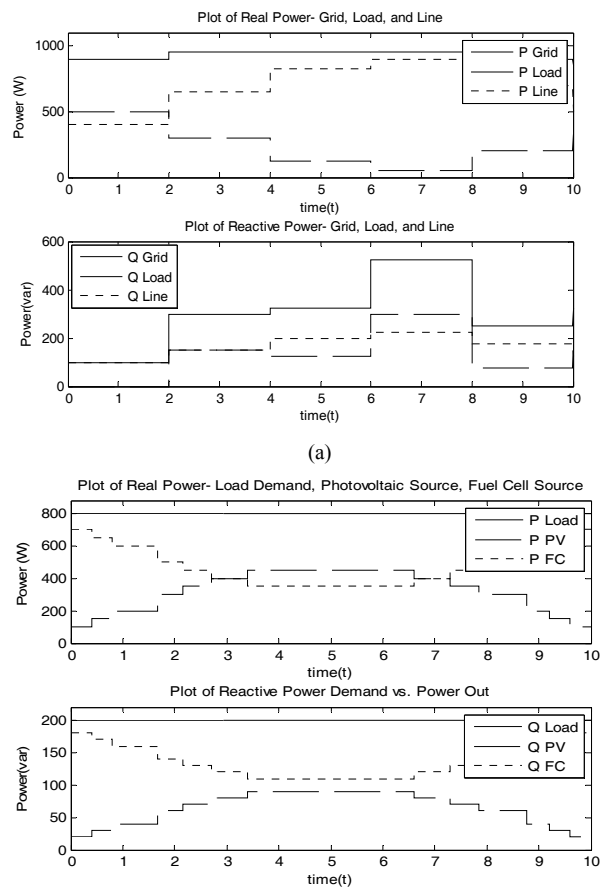

Fig. 7. a) Load following with priority to PV system b) Changes in P and Q for a dynamic load study

V. Multi-Agent based Load Restoration for Microgrids (New Mexico State University)

Once a fault in microgrids has been cleared, it is necessary to restore the unfaulted but out-of service loads as much as possible in a timely manner. To improve the reliability of

microgrids and lower the cost of control system, fully distributed load restoration solutions are preferable. However, existing Multi Agent System (MAS) based solutions have limited applicability and lack rigorous stability analysis.

To address the needs of microgrids and the problems with existing solutions, a fully distributed MAS based load restoration solution is proposed in [10]. 'Fully distributed' means that each bus in a microgrid has an associated agent and two agents communicate with each other only if their corresponding buses are electrically coupled.

The proposed solution is based on a consensus based global information discovery algorithm, which can guarantee convergence for microgrids of any size and topology. According to the algorithm, the information discovery process is represented using (3).

$$x_i^{k+1} = x_i^k + \sum_{j=1}^{n} a_{ij}(x_j^k - x_i^k) \tag{3}$$

where x_i^k and x_j^k are the information discovered by agents i and j at iteration k, x_i^{k+1} is the immediate update of x_i^k, a_{ij} is the coefficient for the information exchanged between agents i and j, and n is the number of working agents.

According to rigorous stability analysis, as long as the coefficients a_{ij} satisfy certain constraints [10], all x_i will converge to the same value as represented in (4).

$$x_i^{\infty} = \frac{\sum_{i=1}^{n} x_i^0}{n}, \text{ for i=1~n} \tag{4}$$

According to (4), as long as the global information of interest can be represented as a sum of local signals, the average of the global information can be discovered.

Above algorithm is robust against losses of distribution lines and agents. In addition, change of operating condition during ongoing information discovery process can be identified to guarantee the accuracy of the discovered information, as illustrated in Fig. 8.

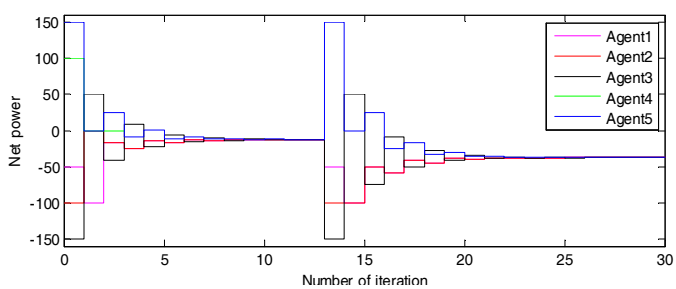

Fig. 8. Information discovery process in response to loss of agent

For load restoration, above algorithm is used to find global net active power and load connection status. Based on above algorithm, the same global information can be obtained by the distributed agents. Since the same optimization algorithm is used, the load restoration decisions made by the agents will be the same. By deploying the corresponding local decisions, the overall system's load restoration activities can be coordinated to form an optimal solution.

Fig. 9 illustrates the information discovery process of the IEEE 118-bus system. One can see that algorithm is able to converge within 180 iterations. Under certain assumptions, the information discovery process can be estimated to be able to converge within 2 milliseconds. Thus, the algorithm can be applied to large scale power systems.

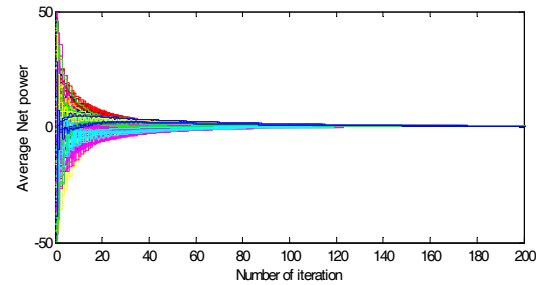

Fig. 9. Information discovery process of the IEEE 118-bus system

Due to the reliability and speed of the global information discovery algorithm, it can be applied to different optimization and control problems of microgrids, such as load shedding, reconfiguration, optimal reactive power dispatch, and control reference setting. Related papers will be reported in the near future.

VI. Robust Control for Parallel-Connected Inverters in a Microgrid (University of Nebraska)

Droop control is commonly employed for power sharing control of parallel-connected inverters in a microgrid. The benefit of using droop control is that it does not need extra communications between inverters. However, droop control has some deficiencies, particularly when the microgrid is operated in the island mode. For example, droop control is not suitable for sharing nonlinear loads. Moreover, under droop control the microgrid may have load-dependent frequency deviations. This section presents a robust control algorithm, which is used to control each inverter to minimize the voltage fluctuations and frequency deviations due to load variations in the microgrid, without the need of extra communications between inverters.

Fig. 10 shows the block diagram of the proposed robust control for a plant, where the $G(s)$ and $K(s)$ are the transfer functions of the plant and the controller, respectively. The H_∞ mixed-sensitivity synthesis method [11] is adopted to design the controller. Two weights, w_1 and w_2, are added in the system to model the augmented plant (called the generalized plant); in which w_1 and w_2 determine the shapes of the sensitivity function and complementary sensitivity function of the plant, respectively. The value of w_1 is selected to be small inside the desired control bandwidth to achieve good disturbance attenuation; while w_2 is chosen to be small outside the control bandwidth to ensure the robustness.

A typical microgrid with multiple inverters is shown in Fig. 11. A voltage source inverter (VSI) of each branch supplies the real and reactive powers to their local loads and the microgird. One of the VSI branches in Fig. 11 is modeled in detail to design the robust controller, as shown in Fig. 12, where $v_{o,abc}$ and v_{abc} represent the voltages at the grid connection points of the VSI and the local load, respectively; the local load is modeled as an RLC load. The circuit breaker is in its open position to isolate the microgrid from the main

grid. State-space equations for the VSI branch can be derived in a synchronously rotating *dq* reference frame as follows:

$$\frac{di_{o,dq}}{dt} = -\left(\frac{R_o}{L_o} + j\omega\right) i_{o,dq} - \frac{1}{L_o} v_{dq} + \frac{1}{L_o} v_{o,dq} \tag{5}$$

$$\frac{dv_{dq}}{dt} = \frac{1}{C} i_{o,dq} - \left(\frac{1}{RC} + j\omega\right) v_{dq} - \frac{1}{c} i_{L,dq} \tag{6}$$

$$\frac{di_{L,dq}}{dt} = \frac{1}{L_{load}} v_{dq} - \left(\frac{R_{load}}{L_{load}} + j\omega\right) i_{L,dq} \tag{7}$$

where ω is the angular rotating speed of the *dq* reference frame.

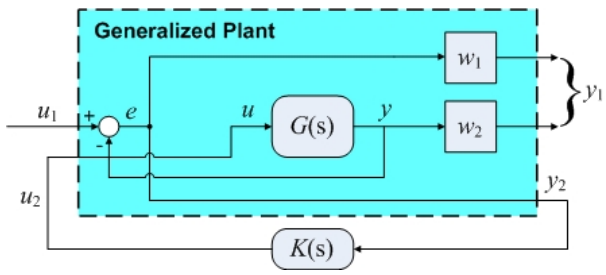

Fig. 10. Block diagram of the proposed robust control for a plant.

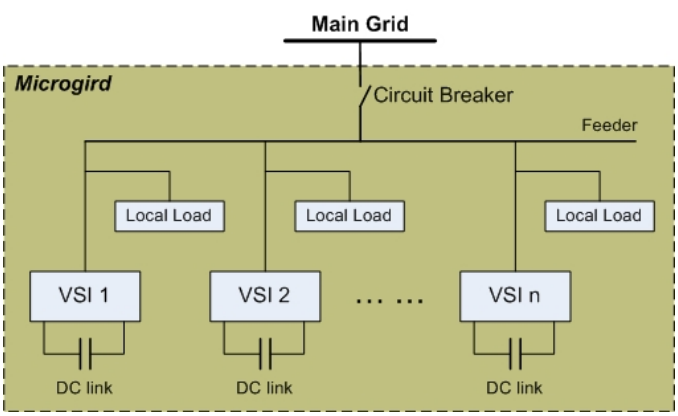

Fig. 11. A Microgrid with parallel-connected inverters.

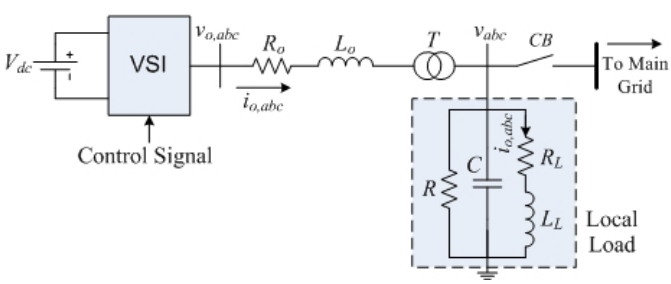

Fig. 12. Single-line diagram of one VSI branch in the microgrid.

If (5)-(7) are written in the standard form with *A*, *B*, *C* and *D* matrices, the transfer function of the system, $G(s) = C(sI–A)^{-1}B+D$, can be derived. With regarding to Fig. 10 for this specific system, u_1 and y are the desired and measured voltages at the grid connection point of the VSI, respectively; u_2 is the controller's output signal used for PWM control of the VSI; and y_1 is a vector consisting of the weighted values of the error signal e and the plant output y. The control objective is to minimize the error signal with the presence of voltage fluctuations due to the changes of the load demand. This objective is achieved by designing a controller $K(s)$ to minimize the H_∞ norm of the following mixed-sensitivity cost function.

$$\left\| T_{y_1,u_1} \right\|_\infty = \begin{bmatrix} w_1 S \\ w_2 T \end{bmatrix} \tag{8}$$

where

$$S = [1 + G(s)K(s)]^{-1} \tag{9}$$

$$T = G(s)K(s)[1 + G(s)K(s)]^{-1} \tag{10}$$

are the sensitivity and complementary sensitivity functions of the system, respectively; *I* is the identity matrix.

Fig. 13 illustrates the singular values of the sensitivity and complementary sensitivity functions. The results show that the singular values of the sensitivity function *S* are in a relatively small range of low frequencies and zeros otherwise. This indicates that the controller is robust to low-frequency variations in the error signal. Moreover, the singular values of the complementary sensitivity function *T* decrease dramatically at high frequencies. This means that the controller also has good immunity to high-frequency variations in the error signal. Therefore, the proposed controller is robust to any voltage variations of the system. The stability analysis reveals that the closed-loop system satisfies the Nyquist stability criterion. The proposed controller can be extended for frequency control of the microgrid operating in island mode using the VSIs as well.

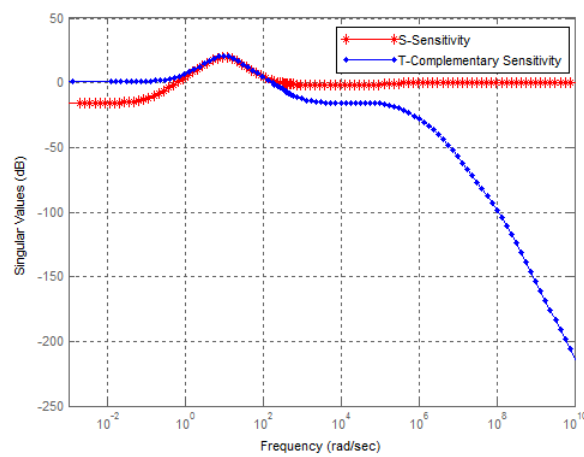

Fig. 13. Singular values of the sensitivity and complementary sensitivity functions vs. frequency.

VII. DC Microgrid for Renewable Energy Sources Integration (Indian Institute of Technology Kanpur, India)

Due to the environmental and availability of fossil fuels, the future trend in electric power generation is forcing towards the Renewable Energy Sources including wind power, solar-photovoltaic, fuel cell, biomass, etc. Therefore, microgrid is one of the solutions to introduce the integration of renewable energy sources. The concept of microgrid by integrating the RES has various advantages such as reduced environmental impacts and transmission and distribution system requirement, more reliable, flexible, controllable, and efficient. There are two types of microgrids: dc microgrid and ac microgrid. In ac

microgrid, inverters are essential for the distributed generations (DGs) having dc output and energy storage system. Additionally, some ac output types DGs also require the inverters for converting the generator frequency to grid frequency.

The dc microgrid has the following advantages over the ac microgrid:

- Several DGs such as solar-photovoltaic and fuel cells can inject power into dc microgrid directly. While asynchronous ac sources can be connected to dc microgrid through ac/dc converters. Thus stand-by losses caused by ac/dc converters can be eliminated. Therefore dc microgrid has lower losses and higher efficiency.
- Each power supply connected with dc microgrid can be easily operated cooperatively because they control only the dc voltage.
- No signal and data communication are made between the existing DGs units.
- There is absence of reactive current which deals a better utilization of the whole system and reduces the total losses.
- Easy interconnections of renewable energy sources.
- Higher power quality.
- Less corona loss.
- Higher reliability and uninterruptible supply.
- Rural electrification.

In the proposed dc microgrid, wind turbine comprises of variable speed Doubly Fed Induction Generator (DFIG), having maximum power point tracking technique. Solar-photovoltaic system comprises a maximum power point tracker to track maximum power from solar photovoltaic system, and a dc/dc boost converter with a controller to regulate the dc output voltage. Fuel cell generation system is integrated to dc microgrid through a dc/dc boost converter to regulate the dc output voltage. Energy storage control unit is connected to dc microgrid through a bidirectional dc/dc converter to provide the power during transient mode. DC microgrid is able to supply both ac and dc power to the loads simultaneously. Each distributed generation unit is controlled autonomously without communicating each other. With this proposed autonomous control method of dc microgrid, high reliable, high quality and stable power can be supplied to the loads. Simulation results show that, the proposed simulation model of dc microgrid and corresponding modular are reasonable. The steady state and transient operations of dc microgrid have been also studied.

VIII. Real Time Simulations of Intelligent Microgrid Control (Washington State University)

Microgrid research fits very well with ongoing smartgrid activities and several challenges need to be investigated before making it reality. Intelligent control of Microgrid with distributed generation and energy storage is important to keep the reliability, stability and security of system as required [12]. The work at Washington State University is addressing two aspect of microgrid control, a) development of multi agent algorithms for intelligent control of microgrid, and b) real time modeling and hardware in the loop simulation validation for microgrid control using real time digital simulator.

In the first part, microgrid model with storage, several loads, wind and photovoltaic based distributed generation (DG) has been developed in MATLAB Simulink. This developed system was tested to operate in grid-connected and islanded operations. Furthermore, system was also tested to investigate the ability of energy storage elements to provide temporary power in emergency conditions. The simulation results shows that the microgrid improve reliability of the distribution system by providing power to the sensitive loads when there is no supply from the grid. The current system applies local inverter-based control to manage output of DG. Application of multi agent based control algorithm is in progress for coordinated control and power management. Modeling is also being developed in real time digital simulator (RTDS) for controller-hardware in the loop demonstration.

Second part of the research activities relates to real time simulation of microgrid reconfiguration using genetic algorithms (GA). The power system of an electric ship resembles a smart microgrid with similar characteristics [13]. Like microgrid, the electric ship power system is designed to be autonomous, highly reliable, capable of delivering high quality power to all loads, and organized as a flexible distribution network that can be reconfigured depending on need. In this work, GA is used with graph theory as reconfiguration algorithm for shipboard power system (SPS) and implemented using controller-in-the-loop setup [14]. SPS was modeled in RTDS and GA algorithms running in dSPACE controller makes decision about change in status of breakers after fault occurs. RTDS is a fully digital simulator, which can perform simulations with a time step of 2 microseconds. Test case for eight-bus SPS is developed in RTDS and connected with dSPACE controller as shown in Fig. 14. Digital optical isolation system (DOPTO) has been selected as I/O card on RTDS. The DOPTO System is used to interface up to 24 digital input and 24 digital output signals between the RTDS and dSPACE. Status of circuit breakers can be close or open corresponding to digital signal of one and zero.

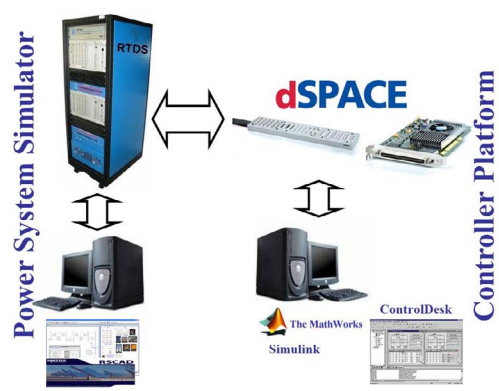

Fig. 14. RTDS with dSPACE for real-time implementation

Fault signal in the RTDS simulation indicating fault status was transferred to dSPACE to start the reconfiguration algorithm. Signals from dSPACE controller indicating switch status were sent to RTDS after any change. Steps of real-time implementation are as follow: a) RTDS simulates shipboard

power system and sends fault signal to dSPACE, b) if dSPACE detects fault, it runs the GA reconfiguration algorithm otherwise keep the breaker status same, c) sends back the status of breakers to RTDS.Simulation and real-time implementation results obtained are satisfactory and proposed method can be easily extended for application to more complex microgrid power system. Developed real time simulation test bed can also be used for several different types of control algorithms.

IX. Distributed Control and Optimized Operation (Center for Advanced Power Systems)

Smart grids enable small producers to generate and sell electricity at the local level. The smart grid concept provides an effective approach to integrating small-scale Distributed Energy Resources (DERs) into the bulk electric grid. Without the additional information and intelligence provided by sensors and software designed to react instantaneously to imbalances caused by intermittent sources, such distributed generation can degrade system quality. Hence automated intelligent software is necessary for the decentralized management of distributed generation.

Small Distributed Generation (DG) units are DERs that have different owners and several decisions may be made locally, making centralized management difficult. In order to make full use of operations facilitated by a smart grid, the controller of each unit participating in the market should have intelligence so as to make decisions and to coordinate the actions of different units. The local DG units selling power to the network have other tasks also. They produce heat for local installations, keep the voltage, locally, at a certain level or provide a backup system for local critical loads in case of main system failure [15]. These tasks stress the need for distributed management, control and autonomous operation. In this context, the Multi Agent System (MAS) technology is suitable for the autonomous management of DERs within a smart grid.

The goal of our research is to advance the state of the art by determining the optimal generation schedule of the DERs using an optimization routine such as the Artificial Immune System (AIS) and to consider risks associated with the auction process. We employ agent-based framework for effective management and implementation of the auction process. In our implementation, first, the generator bids are calculated considering the optimal generations corresponding to minimum fuel cost and hence the quantity of power/energy the seller (DERs) is offering in the energy market is fixed, even before the auctions. Only the pricing for that quantity of energy is allowed to vary depending on the traders' attitude (risk seeking or risk averse or risk neutral). In doing so, the profit for the seller and buyer are maximized as the seller determines the asking price based on minimum fuel cost. Thus running the optimization routine before bidding will aid the auction process in an energy market. The optimization process was implemented using AIS. The function of the agents is defined according to the characteristics of the individual energy resources. Secondly, a Risk Based (RB) auction strategy is implemented where an agent can assess the risk associated with a "bid" or "ask" under current market conditions and bid/ask accordingly to maximize the profit. The proposed approach was tested and validated on a test system and the results obtained prove that it is economically beneficial for the buyer and seller of power to use this method for the auction process [16]. The communication architecture of agents is shown in Fig. 15. The numbers on each branch indicates the order in which agents communicate amongst each other for efficient management of DERs. The MAS was implemented using JADE (Java Agent DEvelopment) framework [17]. Detailed description of this research can be found in [16].

The researchers at CAPS are advancing the research further by extending the agent based auction environment for charging of Electric Vehicles (EV) connected to the grid and is referred to as smart charging of EVs. The agents representing EVs and grid will be involved in trading of charge between the grid and EVs based on the Time of Use (TOU) prices to determine the optimum charging time and duration to minimize the cost of energy to the consumers and to maximize the efficiency of the overall electrical system.

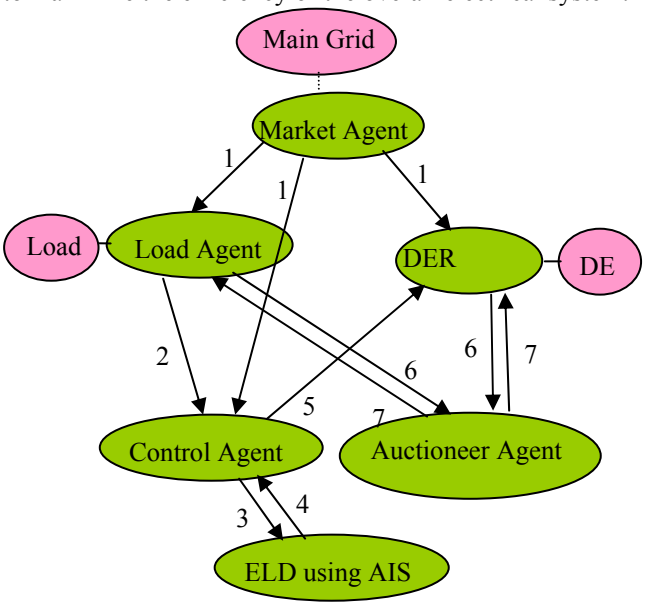

Fig. 15. Communication Architecture of Agents for Management of DERs

X. Smart Microgrids (The Real-Time Power and Intelligent Systems Laboratory at Missouri University of Science & Technology)

A sustainable smart micro-grid should consist of wind and/or, solar, battery (energy storage) and thermal generation with dynamic moderate load (both traditional and controllable).

It is very challenging to design an optimum smart micro-grid with expensive renewable energy sources and storages considering costs, emission and reliability. Over sizing of resources, e.g., wind farm, solar farm, storage, and back-up thermal, increases capital cost too much, which is most of the time not affordable. On the other hand, under sizing of

resources in a micro-grid is unreliable and cannot achieve net zero energy and emission of the system. Resource optimization of a smart micro-grid to determine proper sizing of resources in a micro-grid which reduces costs while attaining net zero energy and emission for the system is a multi-objective optimization problem with a large number of constraints. Suitable techniques for handling such optimization include particle swarm optimization [18] and other computational intelligence methods [19].

The real-time operation of microgrids with limited resources requires dynamic stochastic optimal control (DSOC) with forecasting and characterization of wind and solar power outputs and installations, respectively. Neural networks are excellent techniques for doing this [20, 21]. Adaptive critic designs (ACDs) have shown the potential for DSOC. ACDs use neural networks based designs for optimization over time using combined concepts of reinforcement learning and approximate dynamic programming [22]. ACDs solve the Hamilton-Jacobi-Bellman equation of optimal control. A critic network approximates the cost-to-go function J of Bellman's equation of dynamic programming (11) (referred to as the heuristic dynamic programming (HDP) approach in ACDs),

$$J(t) = \sum_{k=1}^{\infty} \gamma^k U(t+k) \tag{11}$$

where γ is a discount factor between 0 and 1, and $U(t)$ is a utility function or a local performance index. An action network provides optimal control to minimize or maximize the cost-to-go function J. Fig. 16 shows the HDP based ACD approach. There are several other members of the ACD family that vary in complexity and power [22]. Such approaches have been applied to a grid independent PV-battery system [23].

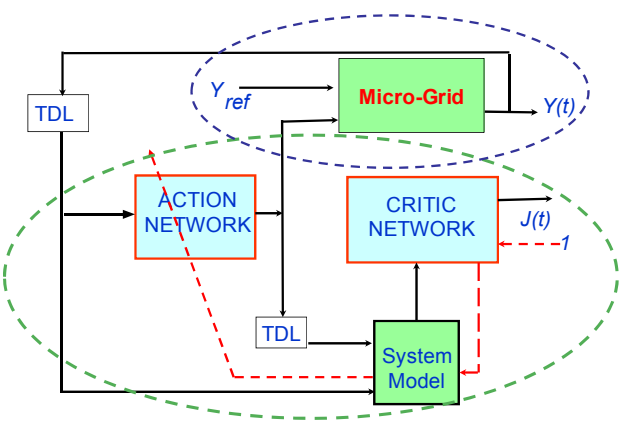

Fig. 16. Adaptive critic design based dynamic stochastic optimal control

References

[1] M. C. Chandorkar, D. M. Divan and R. Adapa, "Control of parallel connected inverters in standalone AC supply systems," *IEEE Trans. Industrial Application*, vol. 29, pp. 136-143, Jan/Feb 1993.

[2] Peng, F. Z., YunWei Li, L.M. Tolbert, "Control and Protection of Power Electronics Interfaced Distributed Generation System in a Customer-Driven Microgrid," *Power & Energy Society General Meeting*, Calgary, AB, July, 2009, pp. 1-8.

[3] Ritwik Majumder, Balarko Chaudhuri, Arindam Ghosh et al, "Improvement of stability and load sharing in an autonomous microgrid using supplementary droop control loop," *IEEE Trans. Power syst.*, vol. 25, no. 2, pp. 796-808, May 2010.

[4] Niannian Cai and Joydeep Mitra, "A Decentralized control Architecture for a Microgrid with Power Electronic Interfaces," *Power Symposium, Proc. of the 42th Annual North American*, Alinton, TX, Sep. 2010.

[5] Ziang Zhang and Mo-Yuen Chow, "Incremental Cost Consensus Algorithm in a Smart Grid Environment," Proceedings of *IEEE Power & Energy Society General Meeting 2011,* under review.

[6] R. Olfati-Saber and R. M. Murray, "Consensus Problems in Networks of Agents With Switching Topology and Time-Delays", *IEEE Transactions on automatic control*, Vol. 49, No. 9, September 2004.

[7] M.Y. El-Sharkh, A. Rahman, M.S. Alam, A.A. Sakla, P.C. Byrne and T. Thomas, "Analysis of Active and Reactive Power Control of a Stand-alone PEM Fuel Cell Power Plant," *IEEE Trans. Power Systems*, Vol. 19 Issue 4, pp. 2022-2028, November 2004.

[8] Wang, Nehrir, Gao "Control of a PEMFC Distribution Generation System" *IEEE Trans on Energy Conversion,* Vlo.21, No. 2, pp. 586-595, June 2006.

[9] K.A. Conner and K. Siri, "Sequentially Controlled Distributed Solar-Array Power System with Maximum Power Tracking," *IEEE AC Paper #1001*, Vol. 4, pp. 2774-2783, March 2004.

[10] Y. Xu and W. Liu, "Novel multi agent based load restoration algorithm for microgrids," IEEE Transactions on Smart Grid (in press). TSG-00078-2010.

[11] M. G. Ortega and F.R. Rubio, "Systematic design of weighting matrices for the H_∞ mixed sensitivity problem," *Journal of Process Control*, vol. 14, no. 1, pp 89-98, Feb. 2004.

[12] Ramon Zamora and Anurag K. Srivastava, "Controls for Microgrids with Storage: Review, Challenges, and Research Needs", Journal of Renewable and Sustainable Energy Reviews vol. 14, issue 7, pp. 2009-2018, September 2010.

[13] R. E. Hebner, J. D. Herbst, A. L. Gattozzi, "Intelligent Microgrid Demonstrator", Proceedings of Electric Machines Technology Symposium (EMTS), May 19-20, 2010.

[14] K. R. Padamati, N. N. Schulz, and A. K. Srivastava, "Application of Genetic Algorithm for Reconfiguration of Shipboard Power System", North American Power Symposium (NAPS), September 30 - October 2, 2007, New Mexico State University, Las Cruces, NM, USA.

[15] A. Dimeas and N. D. Hatziagyriou, "A Multiagent system for Microgrids," in Proc. IEEE PES General Meeting Denver, CO, Jun. 2004.

[16] Bhuvaneswari Ramachandran, Sanjeev K. Srivastava, David A.Cartes and Chris Edrington, "Distributed Energy Resource Management in a Smart Grid by Risk Based Auction Strategy for Profit Maximization", Proceedings of IEEE- PES-GM, 2010 held at Minneapolis, Minnesota between July 25-29, 2010.

[17] F. Bellifemine, G. Caire, T. Trucco, G. Rimassa, "Jade programmer's guide", http://jade.tilab.com/.

[18] Y. del Valle Y, G. K. Venayagamoorthy, S. Mohagheghi, J. C. Hernandez and R. G. Harley, "Particle swarm optimization: Basic concepts, variants and applications in power systems", *IEEE Trans. on Evolutionary Computation*, Vol. 12, Issue 2, April 2008, pp. 171-195.

[19] G. K. Venayagamoorthy, "A Successful Interdisciplinary Course on Computational Intelligence", *IEEE Computational Intelligence Magazine – A special issue on Education*, Vol. 4, No. 1, February 2009, pp. 14-23.

[20] R. Welch, S. Ruffing, G. K. Venayagamoorthy, "Comparison of Feedforward and Feedback Neural Network Architectures for Short Term Wind Speed Prediction", *IEEE-INNS International Joint Conference on Neural Networks*, Atlanta, GA, USA, June 14-19, 2009, pp. 3335-3340.

[21] D. Riley, G. K. Venayagamoorthy, "Characterization and Modeling of a Grid-Connected Photovoltaic System Using a Recurrent Neural Network", *IEEE-INNS International Joint Conference on Neural Networks*, San Jose, CA, USA, July 31 – August 5, 2011.

[22] G. K. Venayagamoorthy, R. G. Harley, D. C. Wunsch, "Comparison of Heuristic Dynamic Programming and Dual Heuristic Programming Adaptive Critics for Neurocontrol of a Turbogenerator", *IEEE Transactions on Neural Networks*, vol. 13, no. 3, May 2002, Page(s): 764 -773.

[23] G. K. Venayagamoorthy, R. Welch, "Energy Dispatch Controllers for a Photovoltaic System", *Engineering Applications of Artificial Intelligence*, vol. 23, no. 2, March 2010, pp. 249-261.