ECE 457 Practice Exam 2

1. Answer the following questions briefly.
   a) A superheterodyne receiver uses an IF frequency of 2500 kHz. The receiver is tuned to a transmitter having a carrier frequency of 1120 kHz. Assuming that the local oscillator uses high-side tuning, i.e. local oscillator is at $f_c + f_{IF}$, find the image frequency.
   b) Explain qualitatively why FM detection using PLL does not work when the PLL output is not approximately equal to the desired message signal.
   c) Let $n(t)$ be a white Gaussian noise process with PSD $S_n(f) = \frac{N_0}{2}$. Find the PSD of
   $$v(t) = [n(t) * h(t)]\cos(2\pi t)$$
   where $H(f) = rect(f)$

2. Let X_1 and X_2 be two independent Gaussian random variables, with mean 2 and standard deviation 4.
   $$Y = 2X_1 + X_2$$
   a) Evaluate $E[X_1 X_2]$.
   b) What's the mean of Y?
   c) What's the variance of Y?
   d) Write the probability density function of $Y, f_Y(y)$.
   e) Find $P[Y \le 2]$. (Hint: You will need to use Q-function table.)

3.

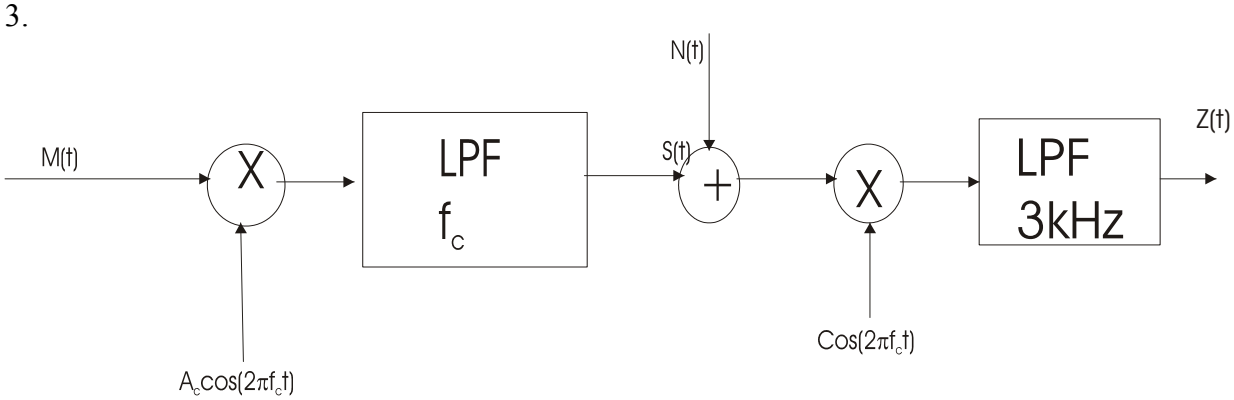

Consider the SSB system shown above. We assume an ideal SSB that filters out the upper sidebands to transmit the lower sideband modulated signal s(t). In general the transmit power, i.e. the power in the transmitted signal s(t), is constrained either by FCC rules or by a certain desired battery life.

Assume the message signal m(t) has PSD $|M(f)|^2$ and its Fourier transform is

$$M(f) = \begin{cases} 0.003 & |f| \le 1.5kHz \\ 0.001 & 1.5kHz \le f \le 3kHz \\ 0 & |f| > 3kHz \end{cases}$$

a) Find A_c such that the power in $s(t)$ is equal to 100 mW.

b) Given A_c found in part (a), find the power in the demodulator output $z(t)$ in the absence of noise.

c) Now assume that $n(t)$ is a white Gaussian process with $S_n(f) = \frac{N_0}{2}$ where $N_0 = 0.0001mW/Hz$. Find the PSD and the power in the demodulator output $z(t)$ due to noise only.

d) Given your answers to (b) and (c), what is the SNR at the demodulator output for this system?

e) Repeat parts (a) and (b) assuming you use DSB modulation instead of SSB modulation with the same power constraint of 100mW on $s(t)$. What is the SNT at the demodulator output in this case ?

f) Interpret your results.