MICHIGAN STATE UNIVERSITY

# Load Metering and Transmission

## Design Team 5


Cheng Zhang - Management
Nan Xia - Web
Alex Gollin -Document
Kenneth Young -Presentation
Patrick Powers - Lab


ArcelorMittal

# Overview

- Background
- Design Specifications and Restrictions
- Conceptual Designs
  - Pulse Width Modulation
  - Wireless
  - Ethernet I/O
- Risk Analysis
- Budget
- Timeline
- References

# Project Background

- ArcelorMittal's Burns Harbor operations routinely require up to approximately 100 megawatts of total facility power usage.
- Due to the cost of electrical power and the company's limited generating capabilities it is vital to have immediate and uninterrupted knowledge of the total electrical load throughout the facility at any time.

# Project Background

- ArcelorMittal needs to have the ability to transmit a signal containing information on the electrical loads at each individual plant to the Central Control Room located up to one mile away.
- The teams goal is to design a new solution for transmitting an electrical load signal from the Hot Mill to the Central Control Room to run in parallel with the outdated system.

# Current System

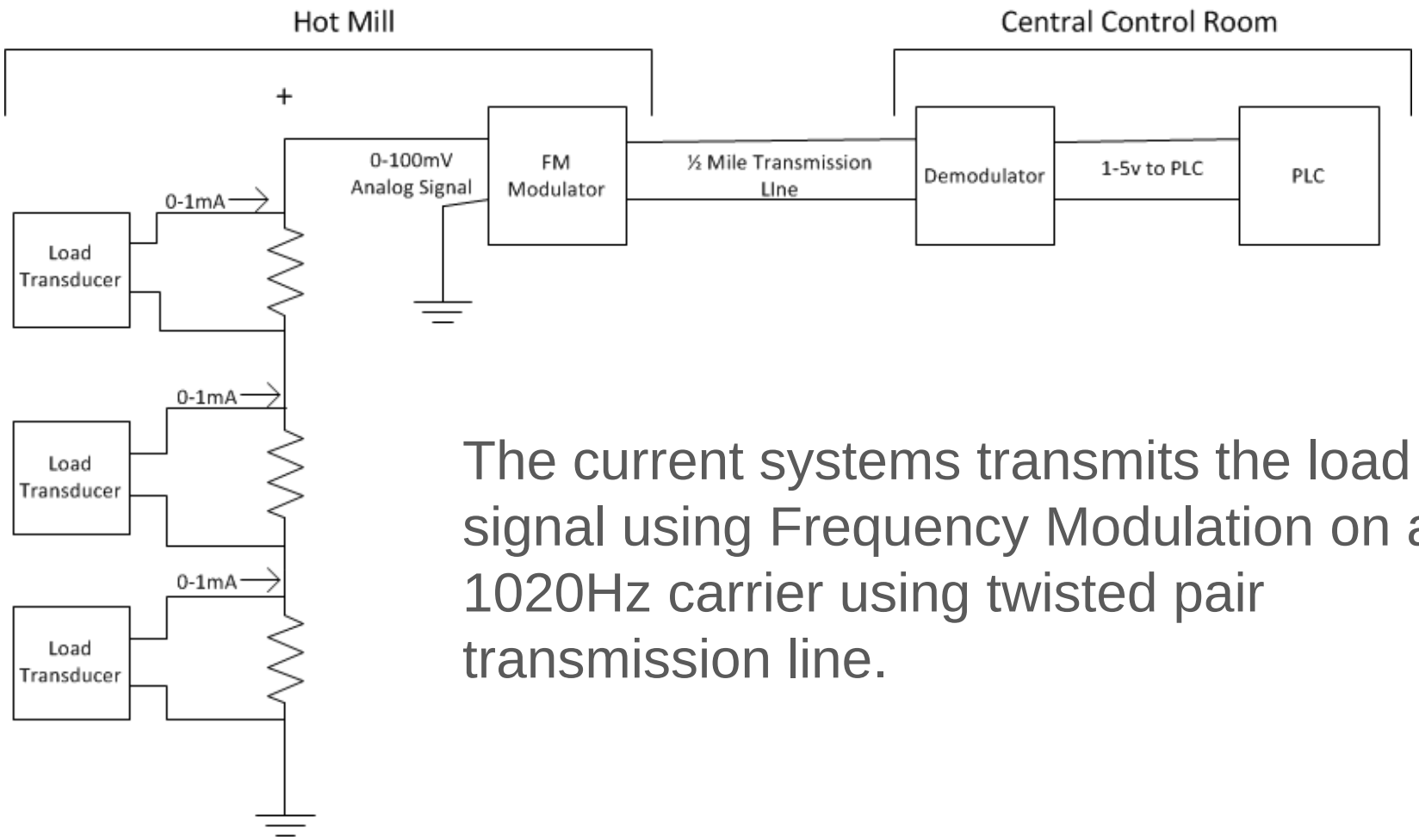


The current systems transmits the load signal using Frequency Modulation on a 1020Hz carrier using twisted pair transmission line.

# Design Specifications

- The design must be capable of transmitting the electrical load signal one-half mile
- The design must provide a 1 to 5V and 4 to 20mA analog signal at the control room PLC

# Design Restrictions

- Must use the already existing 0 to 100mV electrical load analog signal
- The design must run in parallel with the current load signal transmission system
- Design must be implemented with zero down time of the hot mill or the current signal transmission system

# Wireless

Basically use radio transmitter and receiver to transfer analog signal through different frequency band between two points without use of wires.

- *Example: Frequency Modulation Transmission (FM)*
- *Frequency Hopping Spread Spectrum Transmission (FHSS)*

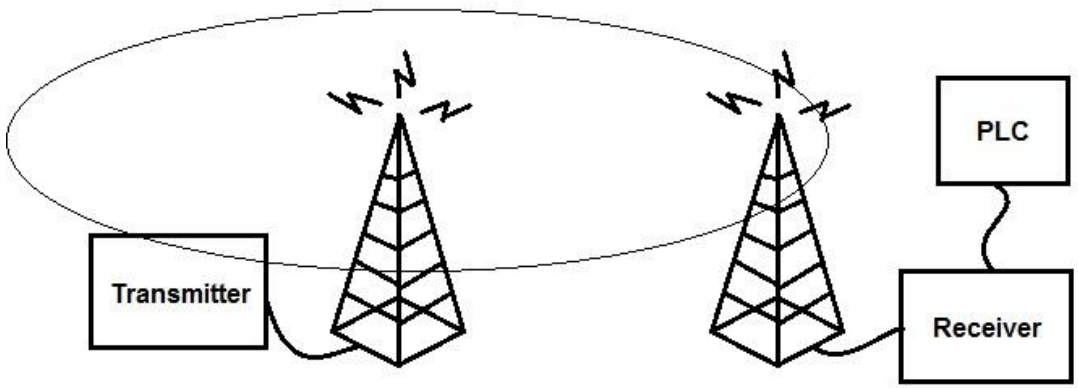

# Wireless

- **Advantages**
  - No extra 1 mile cable necessary.
    - Transmit signal in a long distance.
  - Simplicity of Design
    - Actual products on the market.

- **Disadvantages**
  - Less reliability
    - Easily affected by bad weather or interference.
  - Less secure
    - Wireless signal can be easily captured by others.
  - Expensive
    - Long range antenna will need large budget.

# Ethernet I/O

- Converts the analog input signal to digital then transmits through the Internet cable in an extremely short time.
- Multiple inputs and outputs.
- Configurable for each channel.
- Peer to Peer technology

# Ethernet I/O

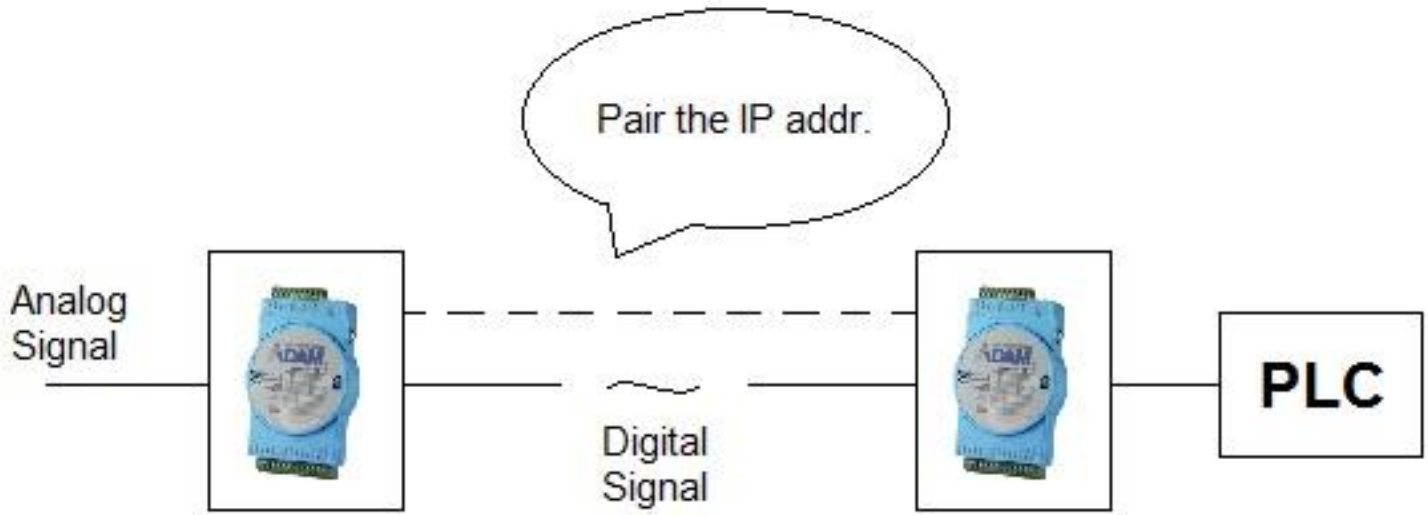

# Ethernet I/O

- More reliable than wireless transmission
  - Can transmit signal through an Internet cable.
  - A Digital signal is more stable than the analog signal.
- Simplicity of Design
  - Can use the existing  internet cable from the mill.
- Concern
  - The existing cable maybe too old for to transmit the signal.
  - Actual products are very expensive on the market.

**<u>Will be used as a secondary design</u>**

# Pulse Width Modulation Overview

- Modulation Basics-
  - Modulation Encodes a lower frequency signal within a higher frequency signal
  - The lower frequency is known as the modulating signal
  - The higher frequency signal is known as the carrier signal

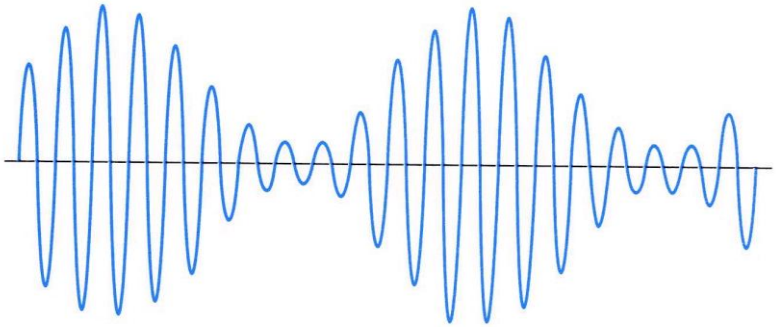

Amplitude Modulated Signal

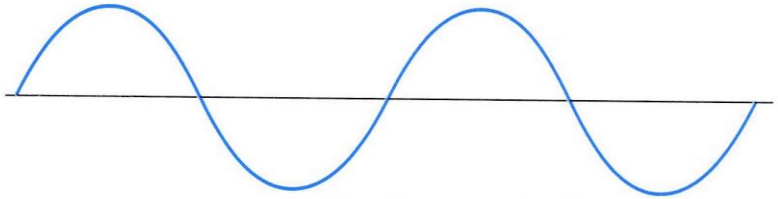

Modulating Sine Wave Signal

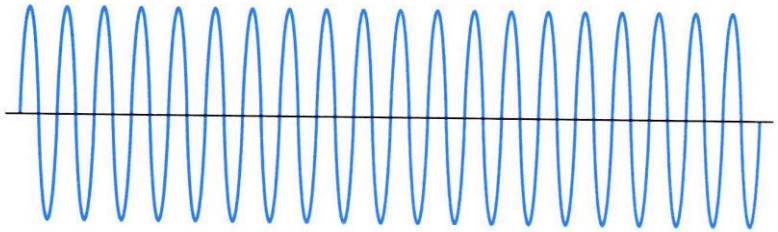

Carrier Signal

# Pulse Width Modulation Overview

- Pulse width modulation is a low cost, reliable solution
- Logic 0, if the modulating signals voltage > carrying signals voltage
- Logic 1, if the modulating signals voltage < carrying signals voltage
- PWM allows the information to be coded with 1 and 0’s, similar to digital transmission.

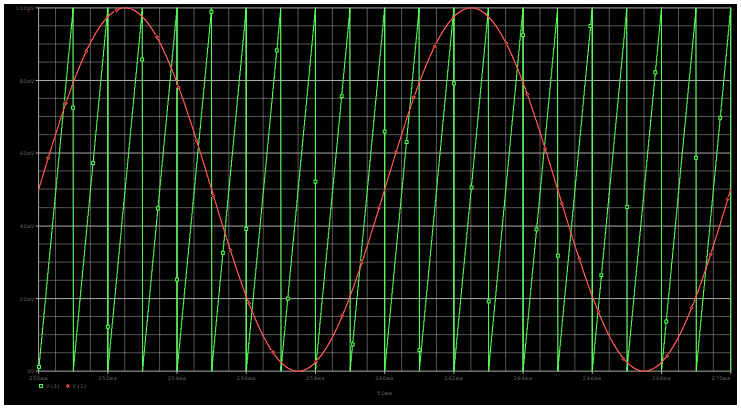

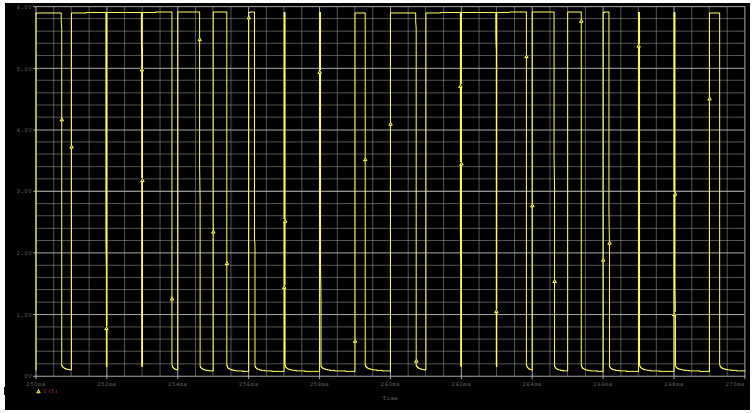

# Signal Transmission

- The transmitted signal is in the form of a pulse type wave
- A square wave is theoretically made up of an infinite number of sine waves at every frequency.
- Once the signal is modulated it will be sent over a transmission line, which acts as a low pass filter, and attenuates higher frequencies.
- The transmission line can cause unwanted distortion leading to attenuation
- In order to avoid attenuation, the team plans to use low frequency transmission to maintain signal integrity.

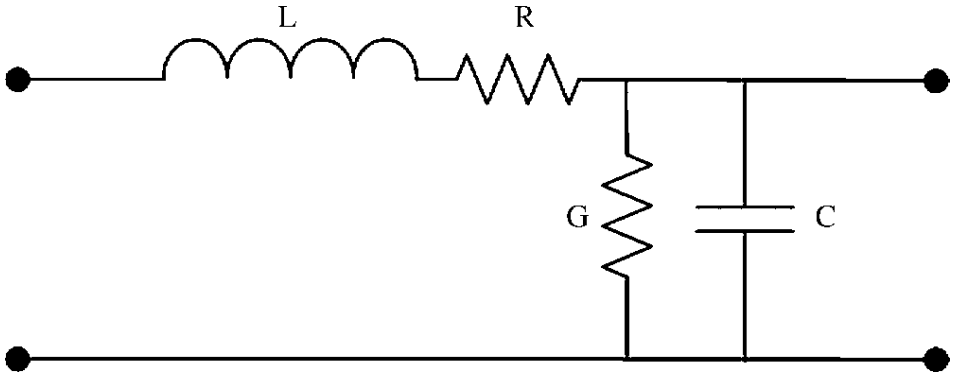

# Signal Reception

- At the destination the information is decoded using a low pass filter.
- A Low corner frequency filter will provide the attenuation needed to get the original signal back.
- The power level signal from the mill will not change rapidly, therefore the input data will be reflected in the output data.

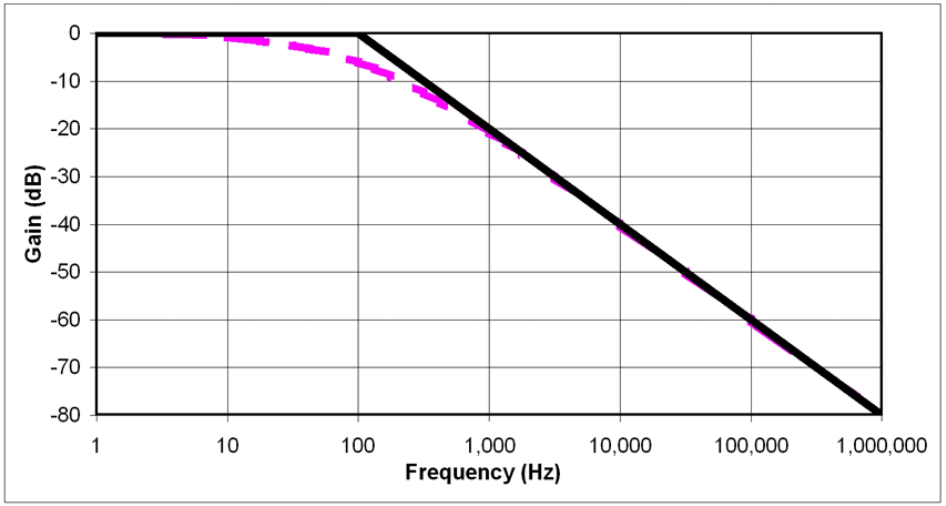

# Application of PWM

- Specifications:
  Input: 0-100mV
  Output: 4-20mA, 1-5V

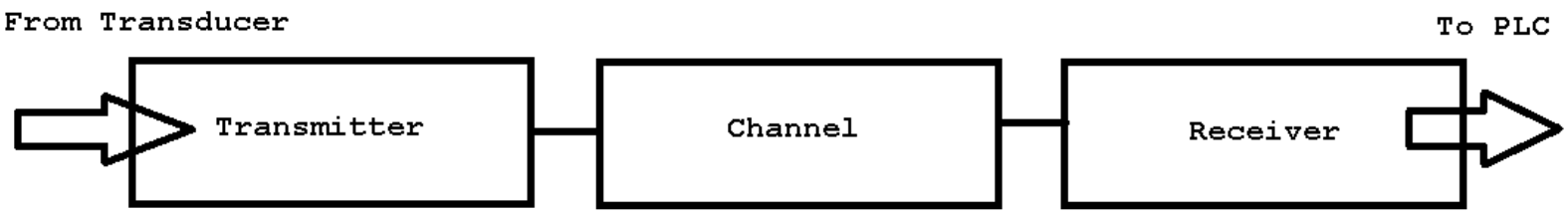

# Transmitter

- Comparator Method:
  - Microcontroller (PIC, Arduino, etc)
  - Comparator/Sawtooth Generator

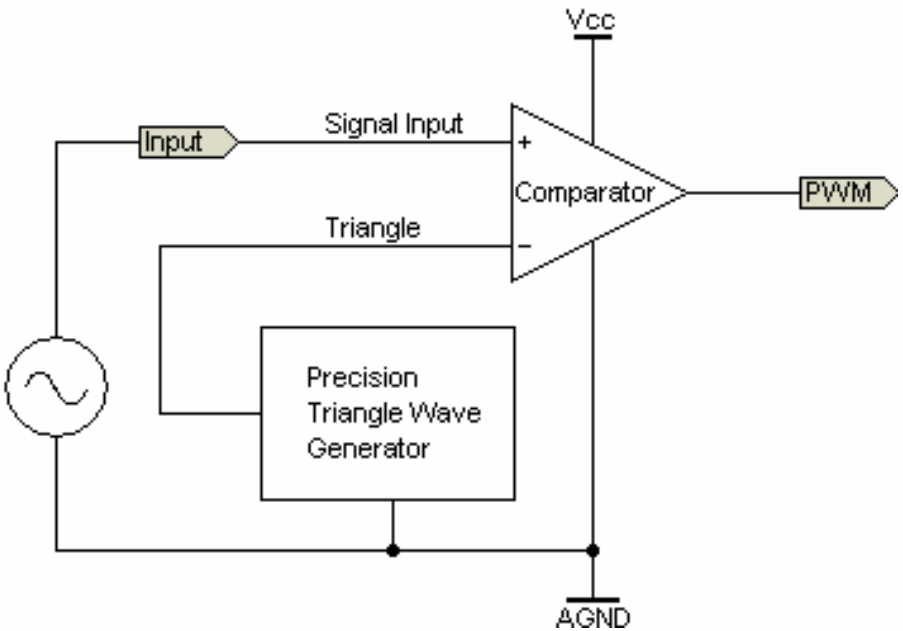


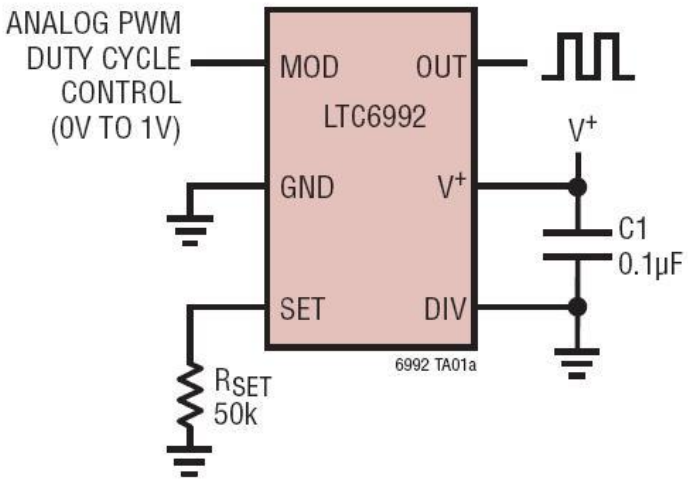


Source: Linear Technology

# Transmitter (Alternative)

- Monostable Multivibrator Method:

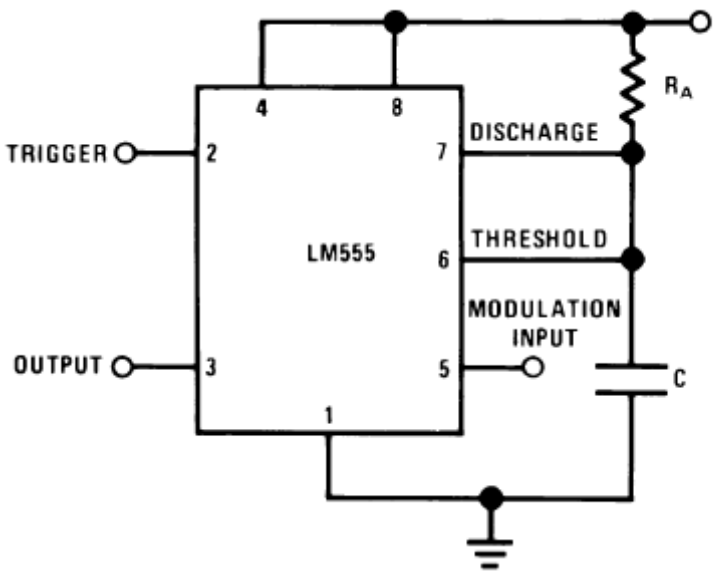


Source: National Semiconductor

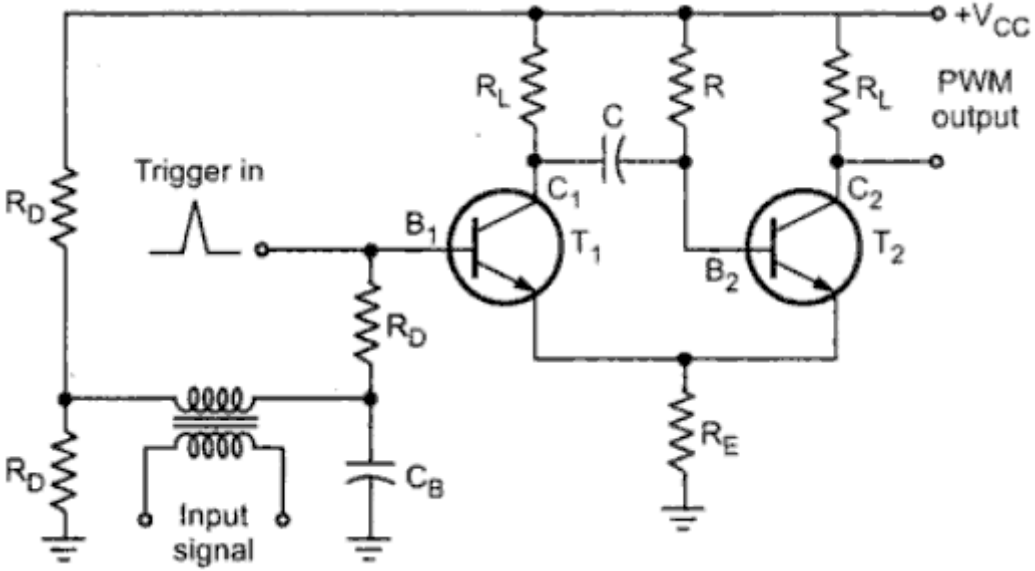


Source: Analog Communication – Godse, Bakshi

# Channel

- Twisted Pair Cable
  - Two insulated wires arranged in a spiral pattern.
  - The signal is transmitted through one wire and a ground reference is transmitted in the other wire.
  - Limited in distance, bandwidth and data rate due to problems with attenuation, interference and noise.
    - Limitations: "Cross talk" due to interference from other signals. Electromagnetic interference (EMI).
    - Noise Compensation: "Shielding" wire (shielded twisted pair (STP)) with metallic braid or sheathing reduces EMI. "Twisting" reduces low-frequency interference and crosstalk.

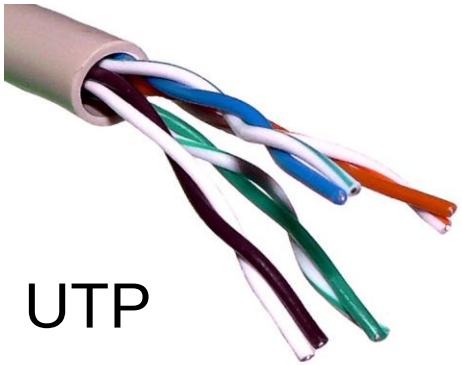


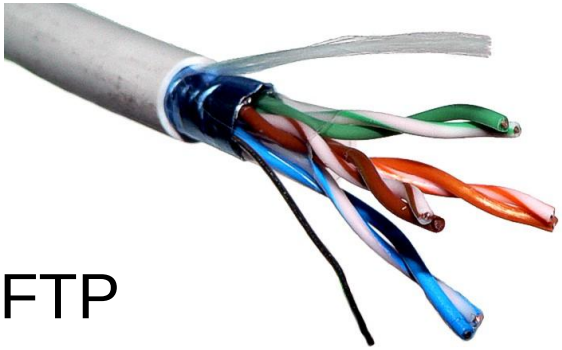

# Channel

- Impulse Response → Convolution!

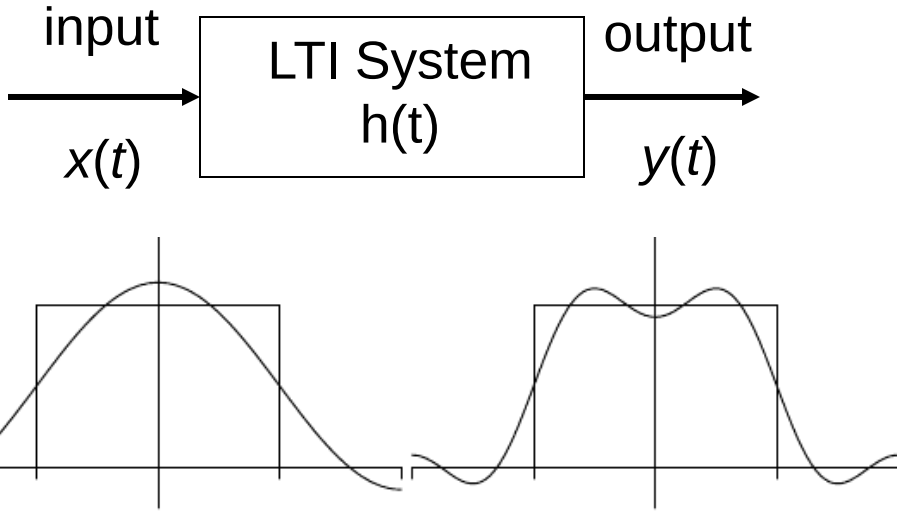


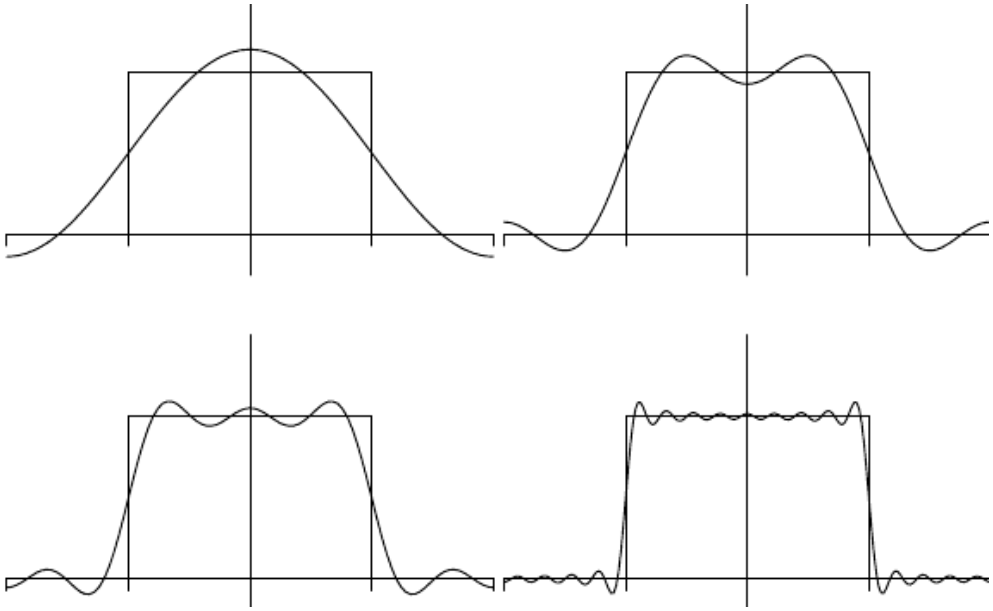

# Receiver

- Demodulation/Detection
  - Approach to PWM is similar to FM
  - Demodulator Examples:

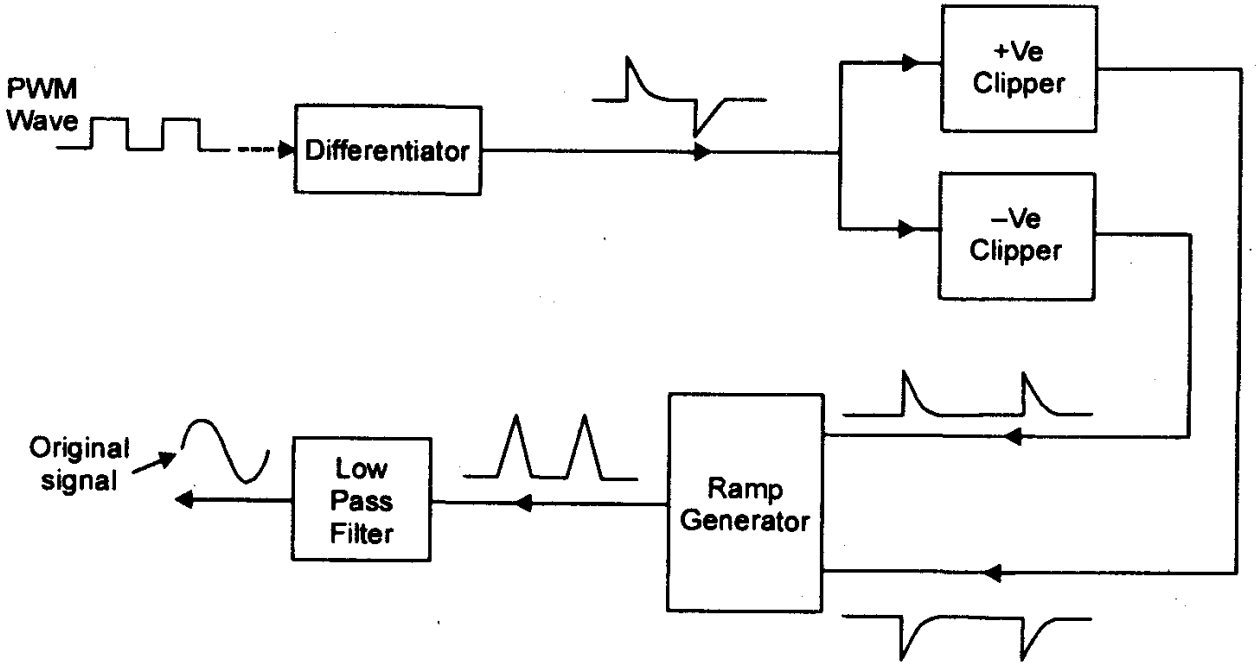

# Receiver

- …More elaborate example:

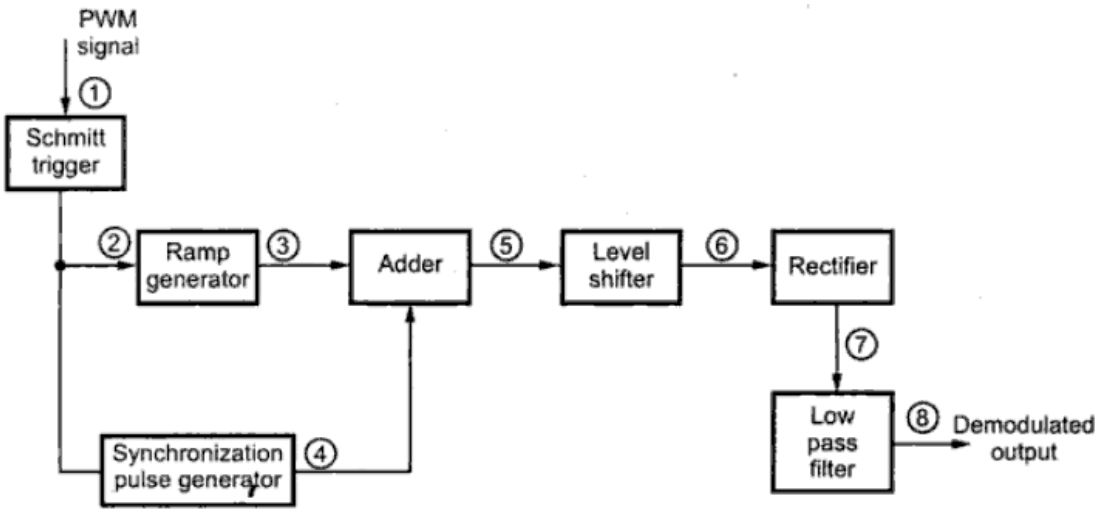


Source: Analog Communication – Godse, Bakshi

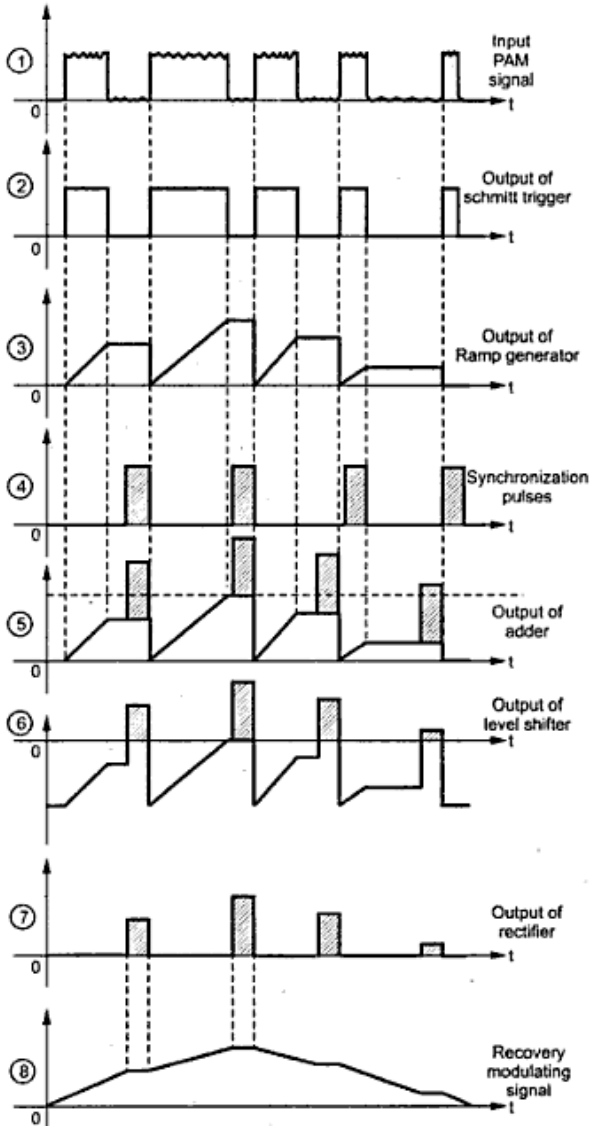

# Receiver

- Integration (Low Pass Filtering)
  - Simple Demodulation
  - Passive LPF:

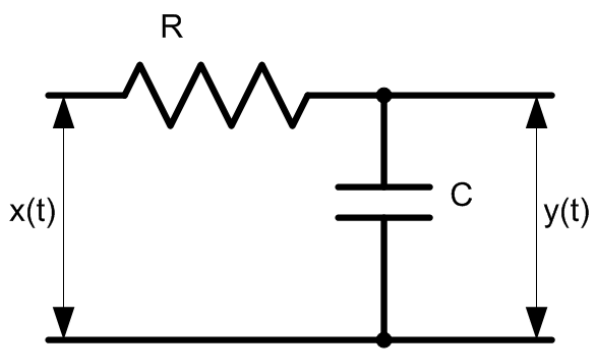


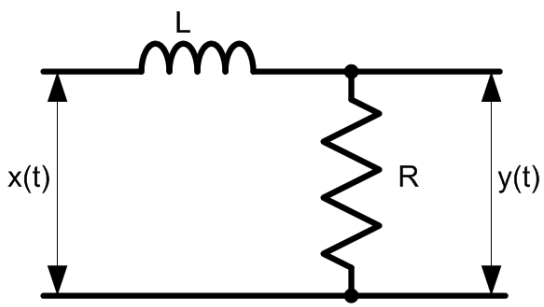


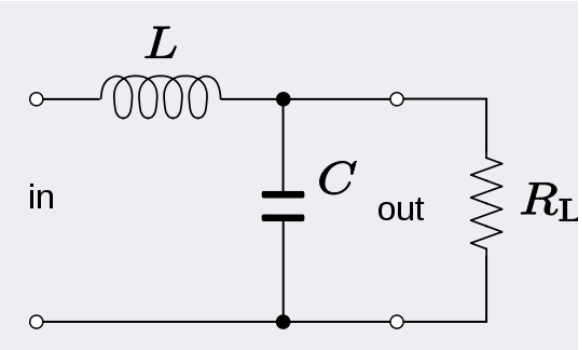

# Receiver

- Active Low Pass Filter
  - Increasing the order provides better filtering
  - Minimizes the use of noisy inductors
  - i.e., 3rd Order Butterworth:

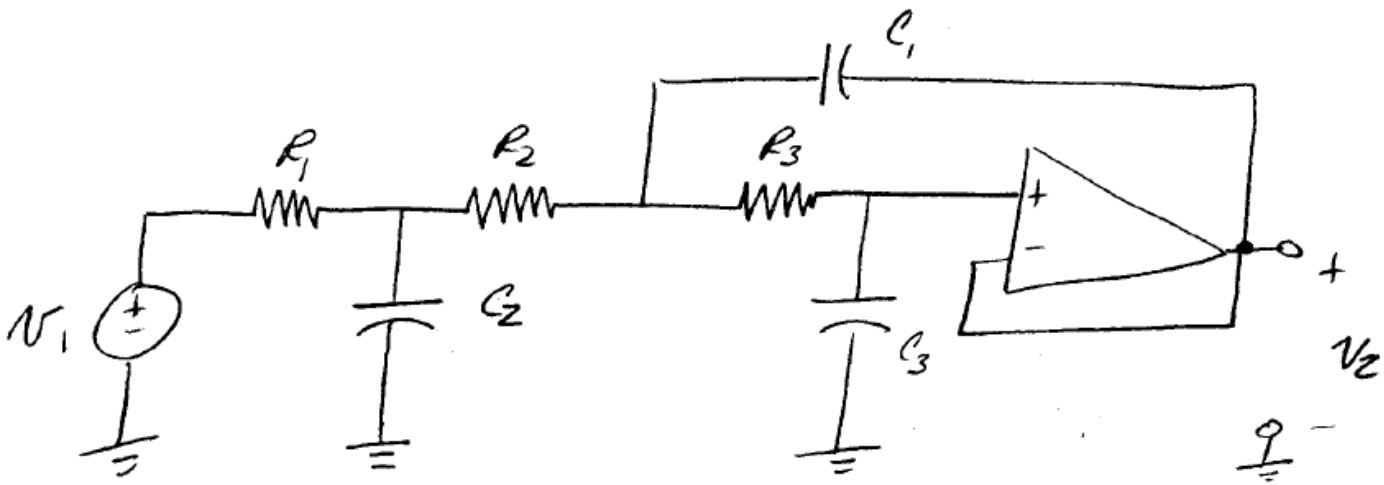

# Proposed Design

- Parts:
  - Comparator (i.e. LM339)
  - Sawtooth generator(i.e. 555 timer or TL074 oscillator configuration)
  - ~2000ft of STP (Belden)
  - Butterworth filter (i.e. LF411)
  - Supporting components (resistors, capacitors, etc)

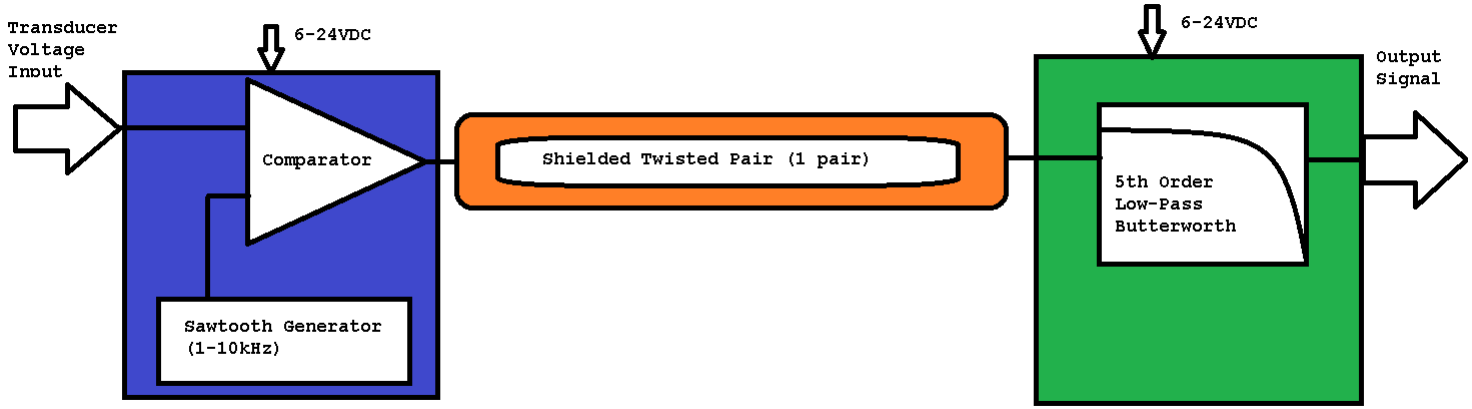

# Risk Analysis

- Attenuation
  - Long distance
- Fabrication Error
  - Resistor, capacitor and inductor tolerance
- Power Consumption
  - 24/7 non-stop running

# Budget

| Electronic components | $0 |
|---|---|
| ICs | $0 |
| PCB Fabrication | $100* |
| Enclosure | $30* |
| Mounting device | $50* |
| Total | $180* |
| | * Estimated |

# Project Management Timeline

- Design and simulation
- Building prototype
- Testing prototype
- Fabrication to PCB
- Final testing

# Team Technical Roles

- Alex Gollin
  - Designing PWM modulator
- Patrick Powers
  - Designing PWM demodulator
- Nan Xia
  - Designing simulation of transmission line
- Ken Young
  - Designing output circuit to PLC
- Cheng Zhang
  - Testing and mounting

# Conclusion

- Background
- Design Specifications and Restrictions
- Conceptual Designs
  - Pulse Width Modulation
  - Wireless
  - Ethernet I/O
- Risk Analysis
- Budget